DS-K6B411TX Series Swing Barrier with Module

User Manual

Safety Instruction

These instructions are intended to ensure that user can use the product correctly to avoid danger or property loss.

The precaution measure is divided into Dangers and Cautions:

Dangers: Neglecting any of the warnings may cause serious injury or death.

Cautions: Neglecting any of the cautions may cause injury or equipment damage.

⚠	⚠
Dangers: Follow these safeguards to prevent serious injury or death.	**Cautions:** Follow these precautions to prevent potential injury or material damage.

⚠ Danger:

- In the use of the product, you must be in strict compliance with the electrical safety regulations of the nation and region.
- The equipment must be connected to an earthed mains socket-outlet.
- Shock hazard! Disconnect all power sources before maintenance.
- Do not touch the bare metal contacts of the inlets after the circuit breaker is turned off. Electricity still exists.
- ϟ indicates hazardous live and the external wiring connected to the terminals requires installation by an instructed person.
- Keep body parts away from fan blades. Disconnect the power source during servicing.
- Keep body parts away from motors. Disconnect the power source during servicing.
- To prevent possible hearing damage, do not listen at high volume levels for long periods.
- All the electronic operation should be strictly compliance with the electrical safety regulations, fire prevention regulations and other related regulations in your local region.
- Do not connect several devices to one power adapter as adapter overload may cause over-heat or fire hazard.
- Please make sure that the power has been disconnected before you wire, install or dismantle the device.
  If the top caps should be open and the device should be powered on for maintenance, make sure:
  1. Power off the fan to prevent the operator from getting injured accidentally.
  2. Do not touch bare high-voltage components.
  3. Make sure the switch's wiring sequence is correct after maintenance.
- Please make sure that the power has been disconnected before you wire, install or dismantle the device.
- When the product is installed on wall or ceiling, the device shall be firmly fixed.
- If smoke, odors or noise rise from the device, turn off the power at once and unplug the power cable, and then please contact the service center.

- Do not ingest battery, Chemical Burn Hazard.
  This product contains a coin/button cell battery. If the coin/button cell battery is swallowed, it can cause severe internal burns in just 2 hours and can lead to death.
  Keep new and used batteries away from children. If the battery compartment does not close securely, stop using the product and keep it away from children. If you think batteries might have been swallowed or placed inside any part of the body, seek immediate medical attention.
- If the product does not work properly, please contact your dealer or the nearest service center. Never attempt to disassemble the device yourself. (We shall not assume any responsibility for problems caused by unauthorized repair or maintenance.)

⚠ Cautions:

- The equipment shall not be exposed to dripping or splashing and that no objects filled with liquids, such as vases, shall be placed on the equipment.
- Ensure correct wiring of the terminals for connection to an AC mains supply.
- The equipment has been designed, when required, modified for connection to an IT power distribution system.
- + identifies the positive terminal(s) of equipment which is used with, or generates direct current. + identifies the negative terminal(s) of equipment which is used with, or generates direct current.
- No naked flame sources, such as lighted candles, should be placed on the equipment.
- This equipment is suitable for mounting on concrete or other non-combustible surface only.
- Install the equipment according to the instructions in this manual.
- To prevent injury, this equipment must be securely attached to the floor/wall in accordance with the installation instructions.
- Stainless steel may be corroded in some circumstances. You need to clean and care the device by using the stainless steel cleaner. It is suggested to clean the device every month.
- Do not drop the device or subject it to physical shock, and do not expose it to high electromagnetism radiation. Avoid the equipment installation on vibrations surface or places subject to shock (ignorance can cause equipment damage).
- Do not place the device in extremely hot (refer to the specification of the device for the detailed operating temperature), cold, dusty or damp locations, and do not expose it to high electromagnetic radiation.
- The device cover for indoor use shall be kept from rain and moisture.
- Exposing the equipment to direct sun light, low ventilation or heat source such as heater or radiator is forbidden (ignorance can cause fire danger).
- Do not aim the device at the sun or extra bright places. A blooming or smear may occur otherwise (which is not a malfunction however), and affecting the endurance of sensor at the same time.
- Please use the provided glove when open up the device cover, avoid direct contact with the device cover, because the acidic sweat of the fingers may erode the surface coating of the device cover.
- Please use a soft and dry cloth when clean inside and outside surfaces of the device cover, do not use alkaline detergents.

- Please keep all wrappers after unpack them for future use. In case of any failure occurred, you need to return the device to the factory with the original wrapper. Transportation without the original wrapper may result in damage on the device and lead to additional costs.
- Improper use or replacement of the battery may result in hazard of explosion. Replace with the same or equivalent type only. Dispose of used batteries according to the instructions provided by the battery manufacturer.
- Biometric recognition products are not completely applicable to anti-spoofing environments. If you require a higher security level, use multiple authentication modes.
- Do not stay in the lane when the device is rebooting.
- RISK OF EXPLOSION IF BATTERY IS REPLACED BY AN INCORRECT TYPE. DISPOSE OF USED BATTERIES ACCORDING TO THE INSTRUCTIONS.
- SUITABLE FOR MOUNTING ON CONCRETE OR OTHER NON-COMBUSTIBLE SURFACE ONLY.
- The instructions shall require connection of the equipment protective earthing conductor to the installation protective earthing conductor.

Contents

Chapter 1 Overview 1
1.1 Introduction 1
1.2 Main Features 1
Chapter 2 System Wiring 3
Chapter 3 Install Pedestals 5
Chapter 4 Install Card Reader Module (Optional) 8
Chapter 5 Install Sub 1G Module (Optional) 9
Chapter 6 Install QR Code Module (Optional) 10
Chapter 7 General Wiring 12
7.1 Components Introduction 12
7.2 Terminal Description 13
7.2.1 General Wiring 13
7.2.2 Lane Control Board Terminal Description 14
7.2.3 Access Board 15
7.2.4 Interface Board Description 18
7.2.5 Card Reader Module Wiring (Optional) 19
7.2.6 Sub 1G Module Wiring (Optional) 21
7.2.7 QR Code Module Wiring 22
7.2.8 Alarm Input Wiring 24
7.2.9 Exit Button Wiring 24
7.3 Reset Device 25
Chapter 8 Indicator Description 26
Chapter 9 Activation 27
9.1 Activate via Web Browser 27
9.2 Activate via Mobile Web 28
9.3 Activate via SADP 29

Chapter 10 Configure the Device via the Mobile Web 31
10.1 Login 31
10.2 Overview 31
10.3 Configuration 34
10.3.1 Turnstile Basic Settings 34
10.3.2 Person Management 36
10.3.3 Keyfob Settings 37
10.3.4 Device Management 38
10.3.5 View Device Basic Information 40
10.3.6 Time Settings 40
10.3.7 User Management 42
10.3.8 Network 42
10.3.9 Sub Access Control Board Settings 45
10.3.10 Event Search 45
10.3.11 Set Audio 46
10.3.12 Access Control Settings 47
10.3.13 Set Face Parameters 53
10.3.14 Set ECO Mode 54
10.3.15 Set Face Mask Parameters 55
10.3.16 IR Detector Settings 56
10.3.17 People Counting Settings 57
10.3.18 Passing and Authentication Indicator Settings 57
10.3.19 Other Settings 57
10.3.20 Upgrade and Maintenance 59
10.3.21 Device Debugging 59
10.3.22 View User Document 60
10.3.23 View Open Source Software License on Mobile Web 60
10.3.24 Log Out 61

Chapter 11 Operation via PC Web 62
11.1 Login 62
11.2 Forget Password 62
11.3 Quick Operation via Web Browser 62
11.3.1 Time Settings 62
11.4 Person Management 63
11.5 Device Management 64
11.5.1 Device Management 64
11.5.2 Batch Devices Management 65
11.6 Turnstile 67
11.6.1 Overview 67
11.6.2 Search Event 68
11.6.3 Paramenter Settings 68
11.6.4 Turnstile Configuration 78
11.7 System and Maintenance 85
11.7.1 Set Local Parameters 85
11.7.2 View Device Information 85
11.7.3 Set Time 85
11.7.4 Change Administrator's Password 86
11.7.5 Online Users 87
11.7.6 View Device Arming/Disarming Information via PC Web 87
11.7.7 Network Settings 87
11.7.8 Set Video and Audio Parameters via PC Web 91
11.7.9 Set Image Parameters 92
11.7.10 Set Wiegand Parameters via PC Web 93
11.7.11 Serial Port Settings 94
11.7.12 Customize Audio Content 94
11.7.13 Maintenance 96

11.7.14 Certificate Management 102

Chapter 12 Other Platforms to Configure 104

Appendix A. Event and Alarm Type 105

Appendix B. Legal Information 106

Chapter 1 Overview

1.1 Introduction

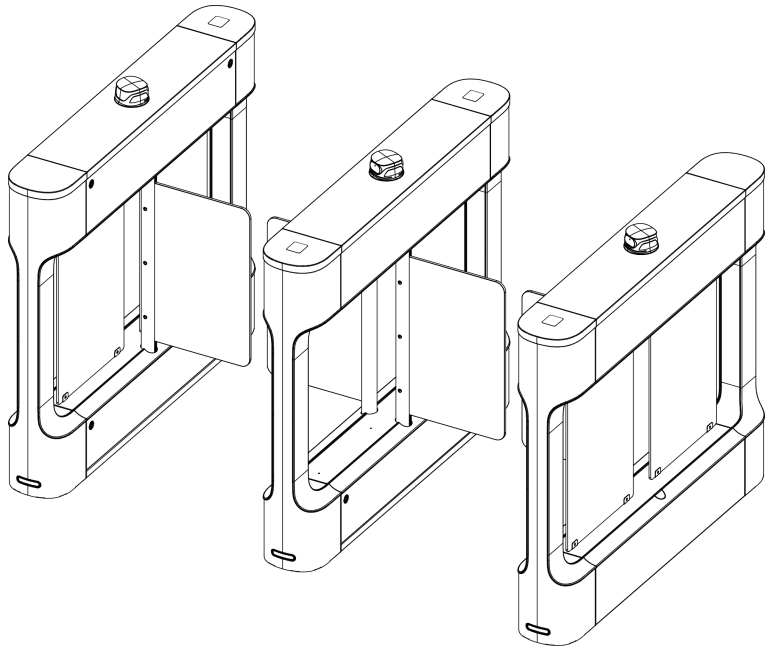

Figure 1-1 Appearance

The swing barrier with two barriers and 6 pairs of IR lights is designed to detect unauthorized passing from the entrance or exit. By adopting the swing barrier integratedly with the access control system, person should authenticate to pass through the lane via swiping IC or ID card, scanning QR code, etc. It is widely used in attractions, stadiums, construction sites, residences, etc.

1.2 Main Features

- Supports AP mode for mobile Web, for Android phones to access more easily by a simple touch via NFC function.
- Supports built-in face recognition camera module on the top of cover, easy and convenient.
- Anti-passback: Supports cross-device anti-passback function, effectively preventing unauthorized personnel from following in.
- WEB management: Supports mobile Web and PC Web management, and can perform operations such as personnel management, parameter configuration, event query, and system maintenance.
- Fire linkage: The equipment has a fire linkage interface. When the fire signal is triggered, the barrier will be open automatically for emergency evacuation.
- Fire alarm passing

When the fire alarm is triggered, the barrier will be open automatically for emergency evacuation.

- Barrier is in free status when powering down, allowing people to pass freely. Super capacitor (optional) can realize automatic door opening in case of power failure.

Chapter 2 System Wiring

The preparation before installation and general wiring.

Steps

1. Draw a central line on the installation surface of the left or right pedestal.
2. Draw other parallel lines for installing the other pedestals.

Note

The distance between the nearest two lines is L+200 mm.

3. Slot on the installation surface and drill installation holes after determining the hole positions. Put 4 expansion bolts of M12*150 for each pedestal.

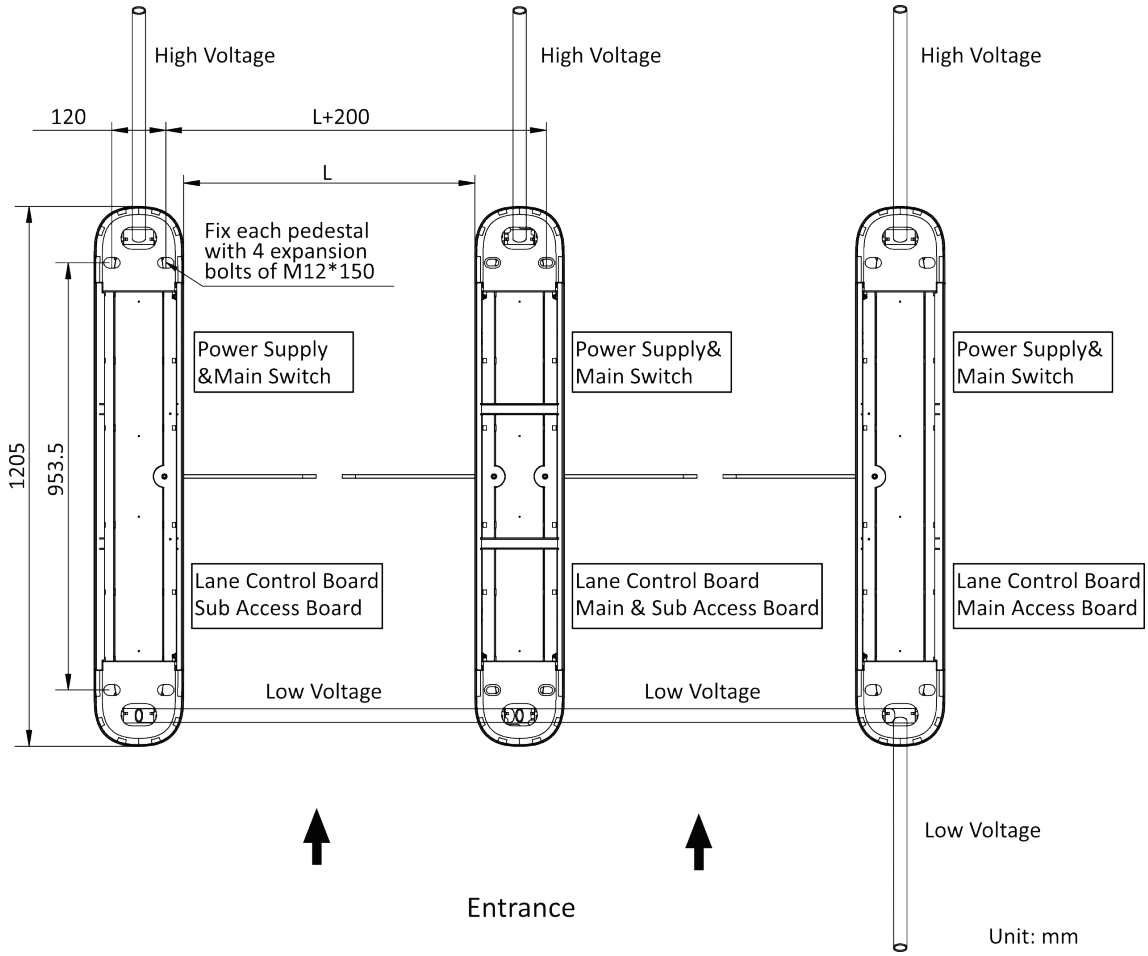

Figure 2-1 Hole Position Diagram

4. Bury cables.

Note

- High voltage: Middle lane 100-120V~/200-240V~, 50Hz/60Hz, 1.6A power input. Side lane: 100-240V~, 50Hz/60Hz, 0.8A power input.
- Low voltage: network communication cable.
- The inner diameter of the low voltage conduit and of the high voltage (AC power cord) conduit should be larger than 30 mm. If any high-power authentication device is required to install on the left pedestal, the diameter of its conduits should be larger.
- If you want to bury both of the AC power cord and the low voltage cable, the two cables should be in separated conduits to avoid interference.
- If more peripherals are required to connect, you should increase the conduit diameter or bury another conduit for the external cables.
- The external AC power cord should be double-insulated.
- The network cable must be CAT5e or other cables with better performance.
- Before digging holes, evaluate the thickness of the installation surface to avoid puncturing.

Chapter 3 Install Pedestals

Before You Start

Prepare for the installation tools, check the device and the accessories, and clear the installation base.

Steps

Note

- Make sure the device is installed on flat surface. The foundation should be hard and the thickness should exceeds the length of the expansion bolt.
- Make sure the device is powered off during installation and other operations.
- The installation tools are put inside the package of the pedestal.
- In order to prevent stainless steel from rusting due to dirt during the installation, it is recommended to tear off the protective film after the device is installed.
- There may be residual glue at the film cutting position, and it is recommended to wipe the glue with WD-40 protective liquid after tearing the film.
- Do not immerse the pedestal in the water. In special circumstances, the immersed height should be no more than 100 mm.
- If the installation area is close to the wall, make sure the distance between the pedestal and the wall should be more than 20 mm, or you might cause damage to the device or cannot open the pedestal's top panel.

1. Prepare installation tools, check the components, and clean the installation base.
2. Align the pedestals with the pre-buried expansion bolts, and remove the bottom maintenance door with the key.
3. Secure each pedestal with expansion bolts, and fix the maintenance door to its original position.

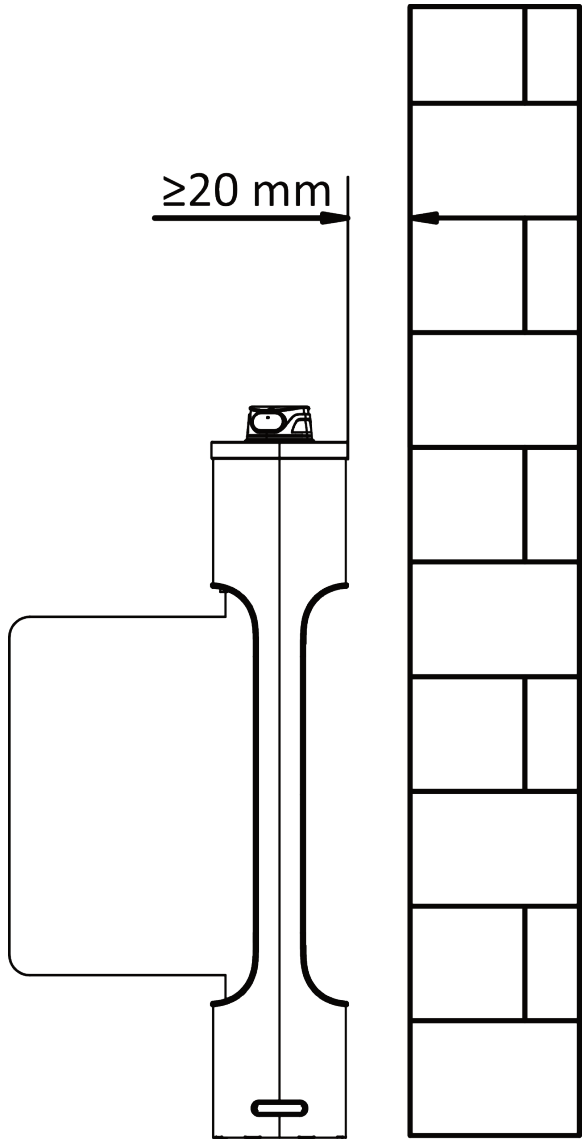

Figure 3-1 Installation Distance

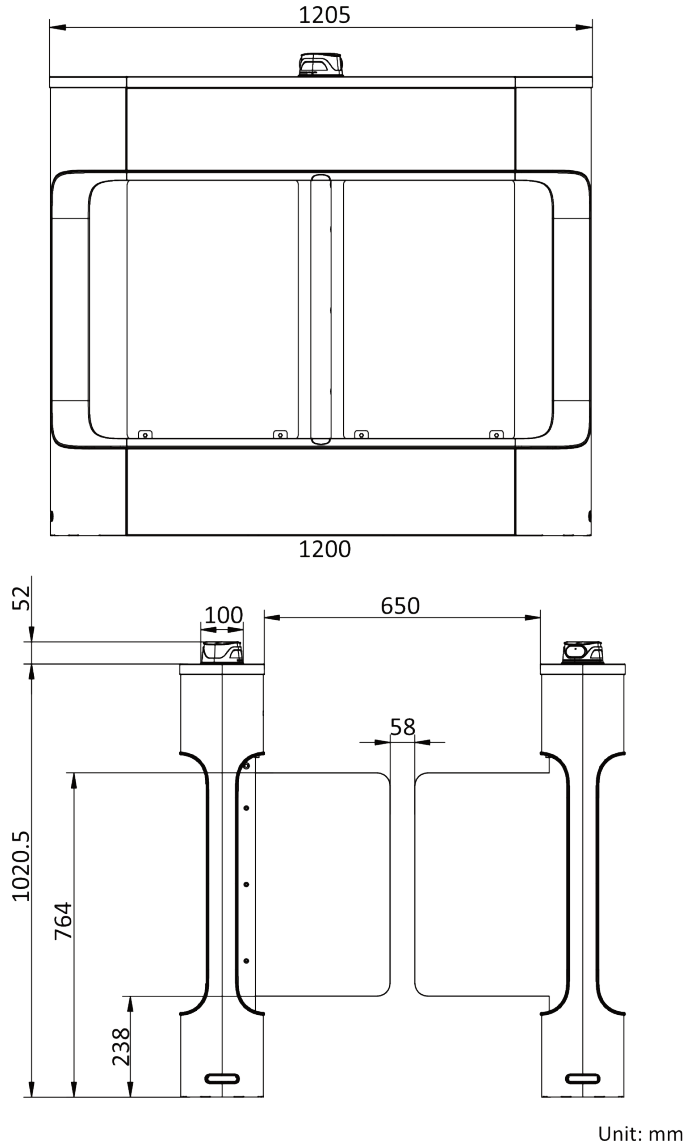

Figure 3-2 Dimension

Chapter 4 Install Card Reader Module (Optional)

If the device is not install the card reader module, you can select to install the card reader module on the turnstile for authentication passing.

Steps

1. Open the cover.
2. Use 3 screws (M3-6) to fix the card reader on the bracket.

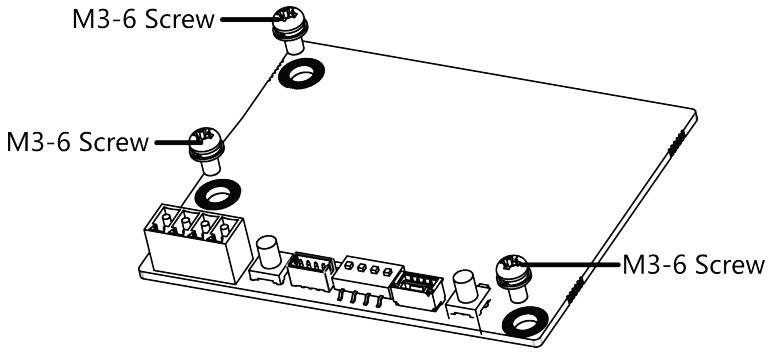

Figure 4-1 Fix Card Reader on Bracket

3. Install the card reader module in the area by 4 screws.
4. Install the coil in the cover.
5. Install the cover back.

Note

The image is for instance. Please refer to actual product.

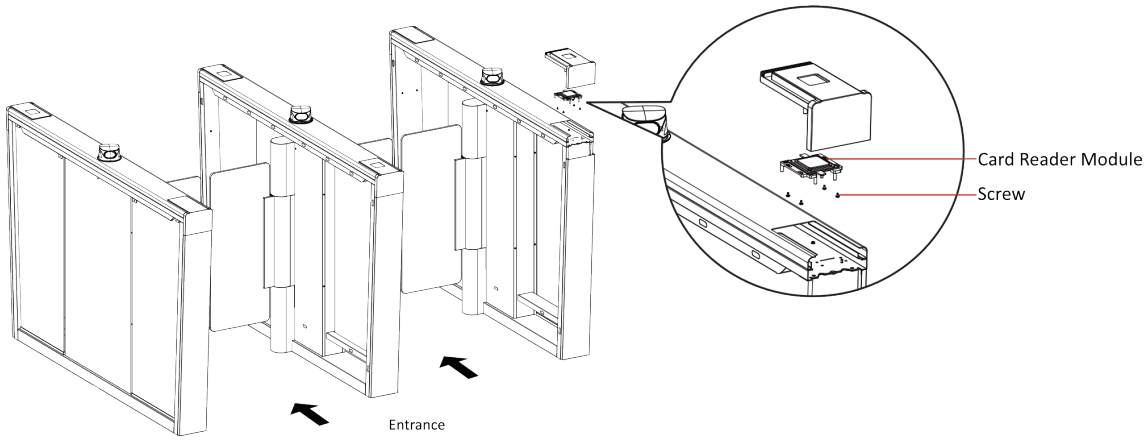

Figure 4-2 Install Card Reader Module

Chapter 5 Install Sub 1G Module (Optional)

If the device is not install the Sub 1G module, you can select to install the module on the turnstile for NFC authentication.

Steps

1. Open the cover.
2. Install the sub 1G module in the area by 4 screws.
3. Install the cover back.

Note

The image is for instance. Please refer to actual product.

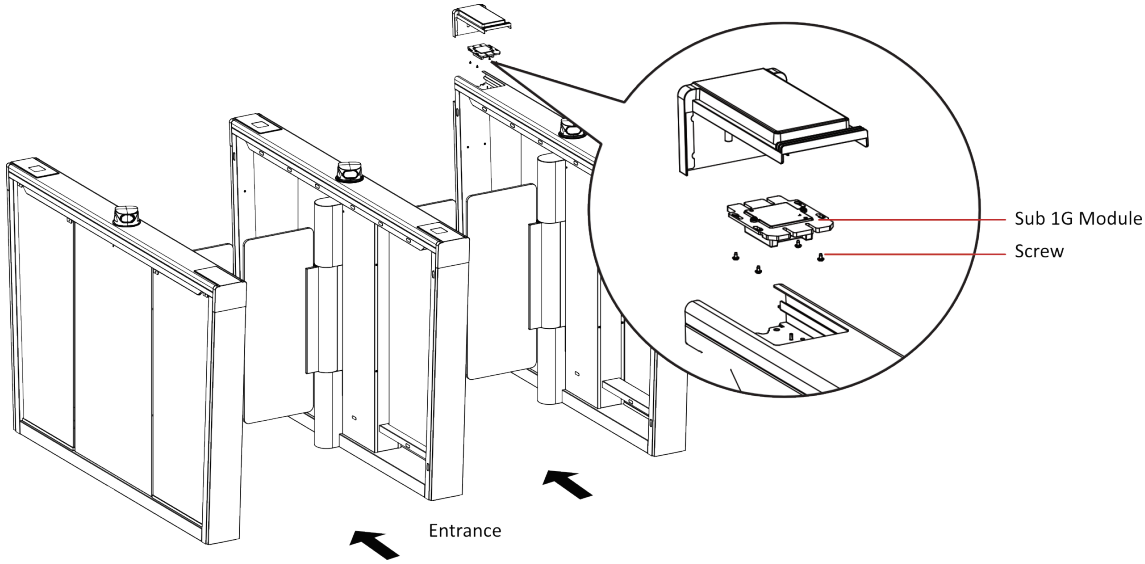

Figure 5-1 Install Sub 1G Module

Chapter 6 Install QR Code Module (Optional)

If the device is not install the QR code module, you can select to install the module on the turnstile for QR code authentication.

Steps

1. Open the cover.
2. Install the QR code module in the area by 4 screws.
3. Install the cover back.

Note

The image is for instance. Please refer to actual product.

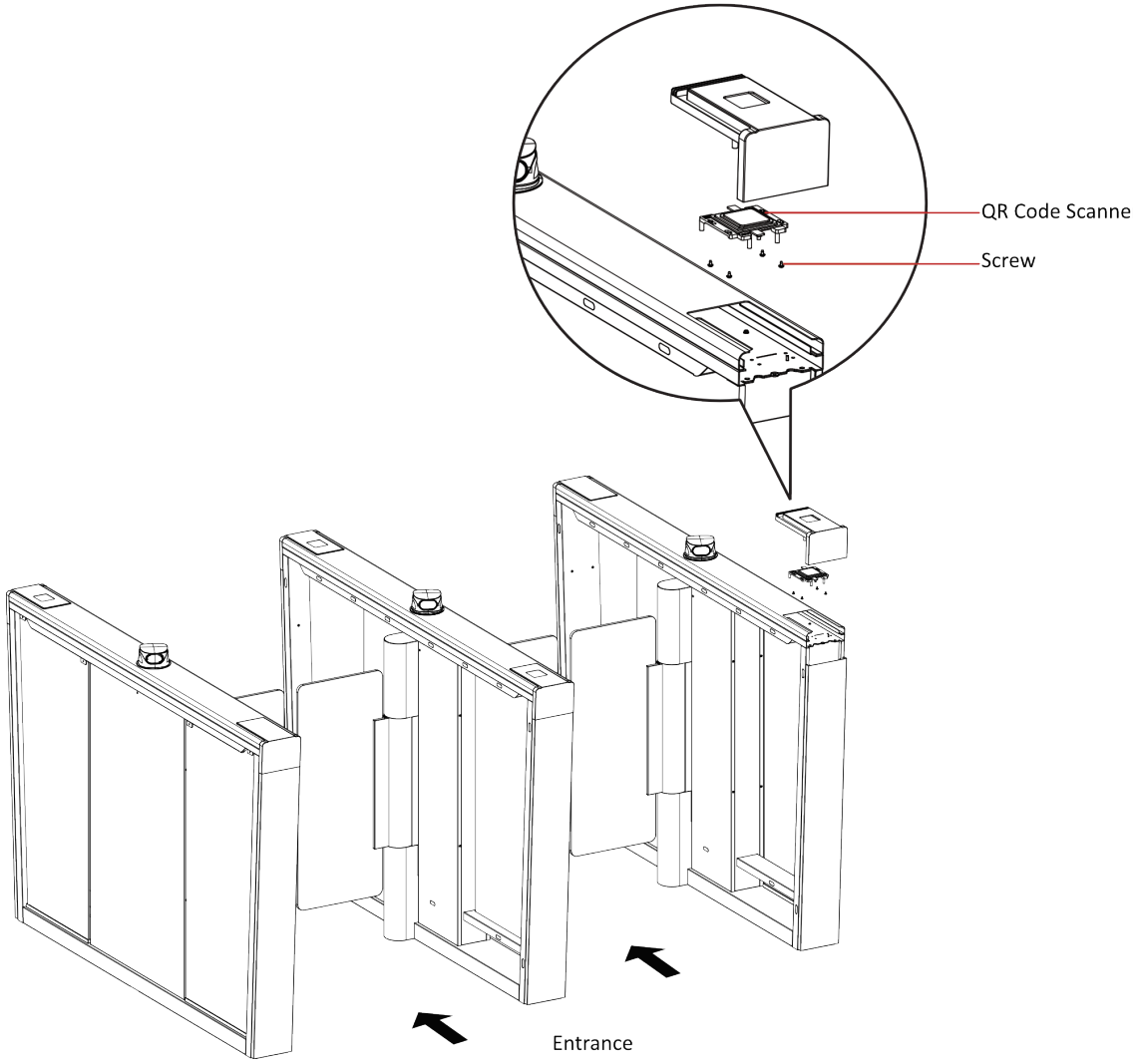

Figure 6-1 Install QR Code Module

Chapter 7 General Wiring

Note

- After maintenance, you should close the water-proof cover over the high/low voltage module.
- When you should maintain or disassemble the high voltage modules, you should remove the entire high voltage modules and maintain it outside the turnstile. You should unplug the cables that connected to the peripherals before maintenance to avoid destroy of the device.

Scan the QR code to view the wiring guide video.

7.1 Components Introduction

By default, basic components of the turnstile are connected well. The pedestals can communicate by wiring the interconnecting cables. And the turnstile supports wiring the AC electric supply for the whole system's power supply.

Note

The voltage fluctuation of the electric supply is between 100 VAC and 220 VAC, 50 to 60 Hz.

The picture displayed below describes each component's position on the turnstile.

Note

The diagram is for reference only.

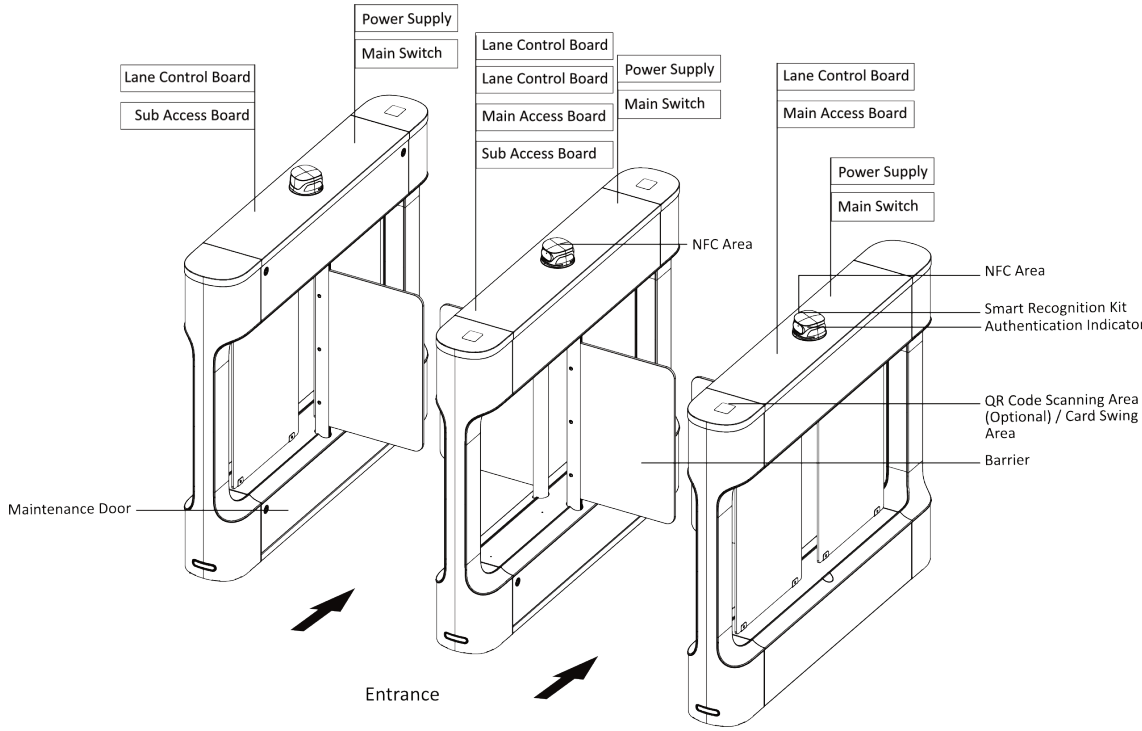

Figure 7-1 Components Diagram

7.2 Terminal Description

The lane controller contains main lane controller and sub lane controller, which controls the IR beams, motor, and other components' work.

7.2.1 General Wiring

The general wiring of lane control board, access control board and optional board.

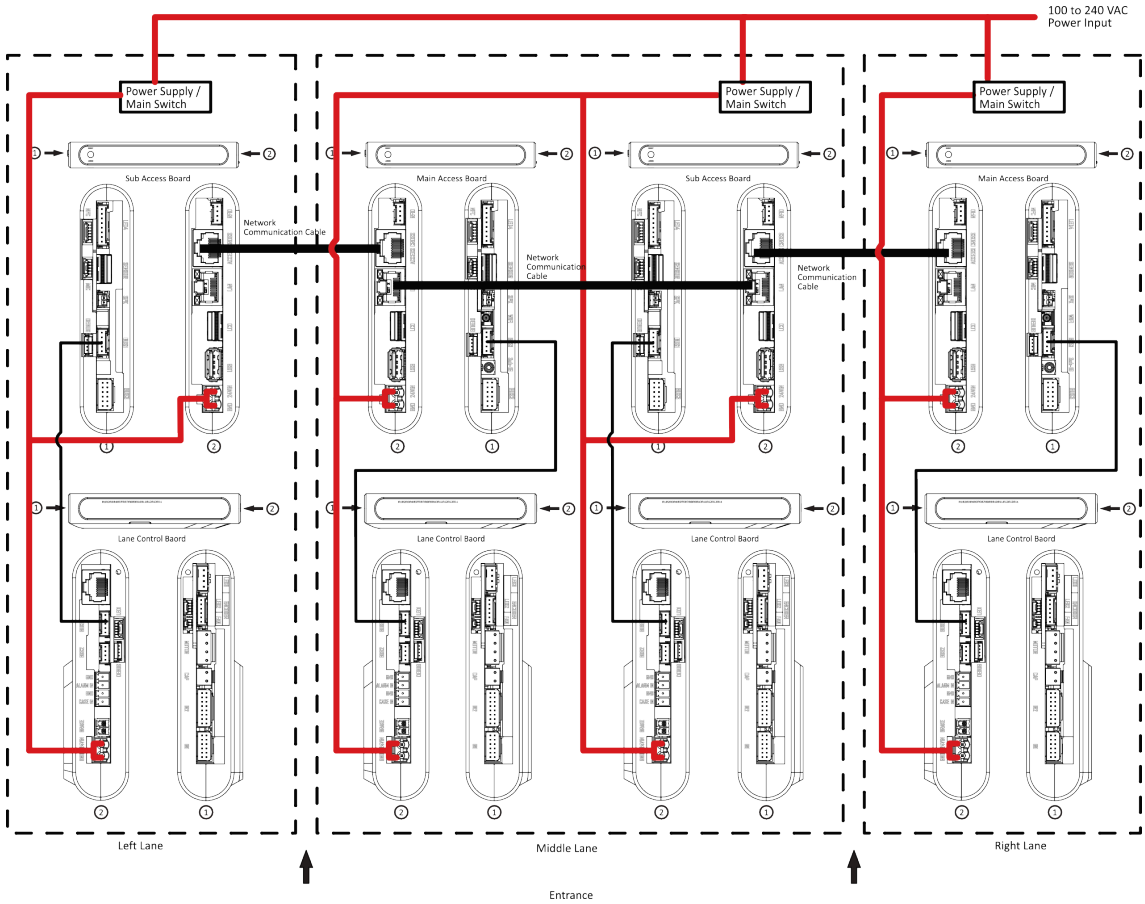

Figure 7-2 General Wiring

Note

- The power cable from power supply to the main lane control board has been connected. You will need to prepare the 14AWG power cable to connect the AC power input to power supply.
- Barrier opens at the entrance/exit: connect to BTN1/BTN2 and GND.

7.2.2 Lane Control Board Terminal Description

The picture displayed below is the main control board diagram.

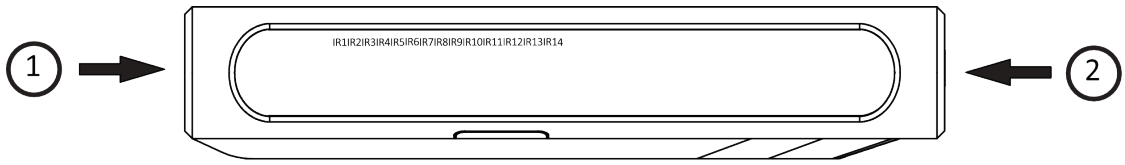

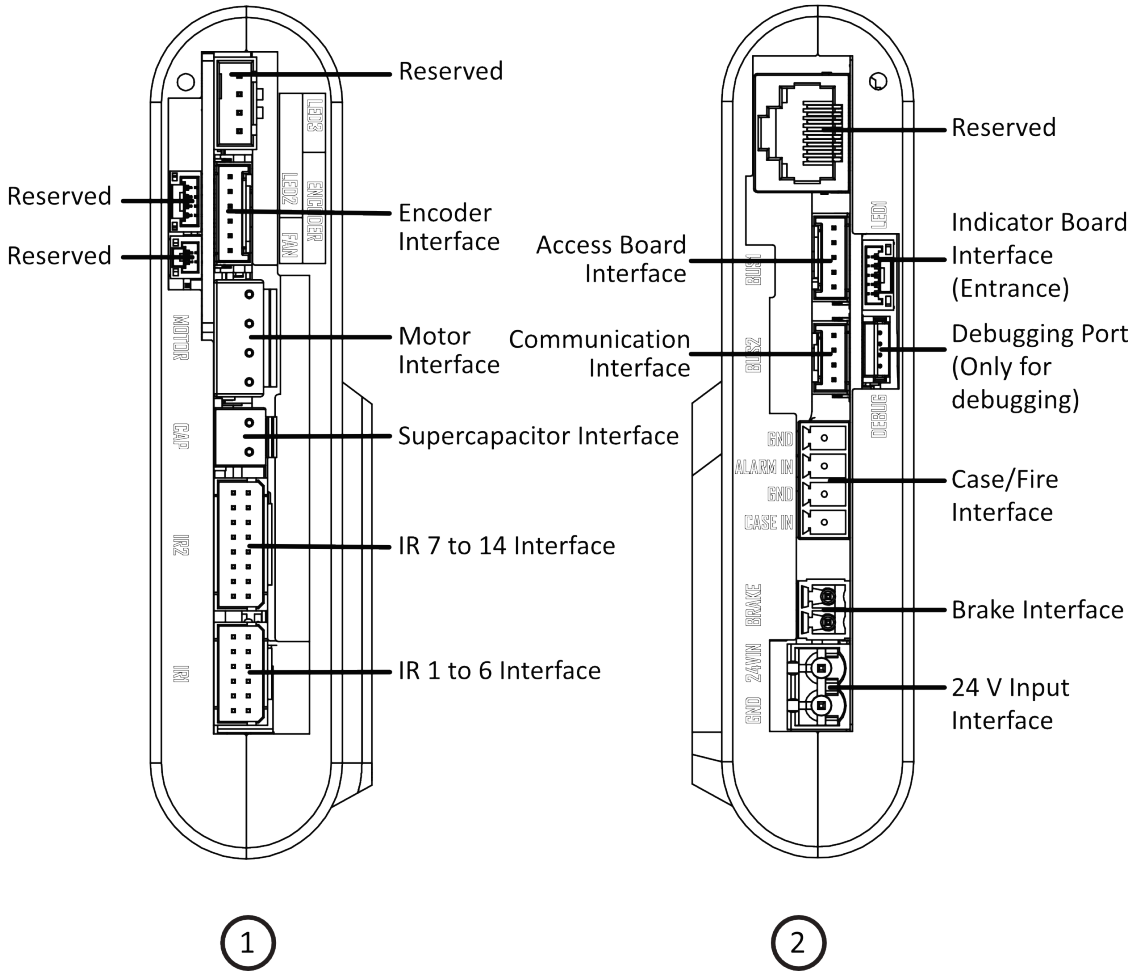

7.2.3 Access Board

Access board is mainly used for authority identification in places with high security levels such as public security or judicial place, external device accessing, and communication with the upper platform and lane controller.

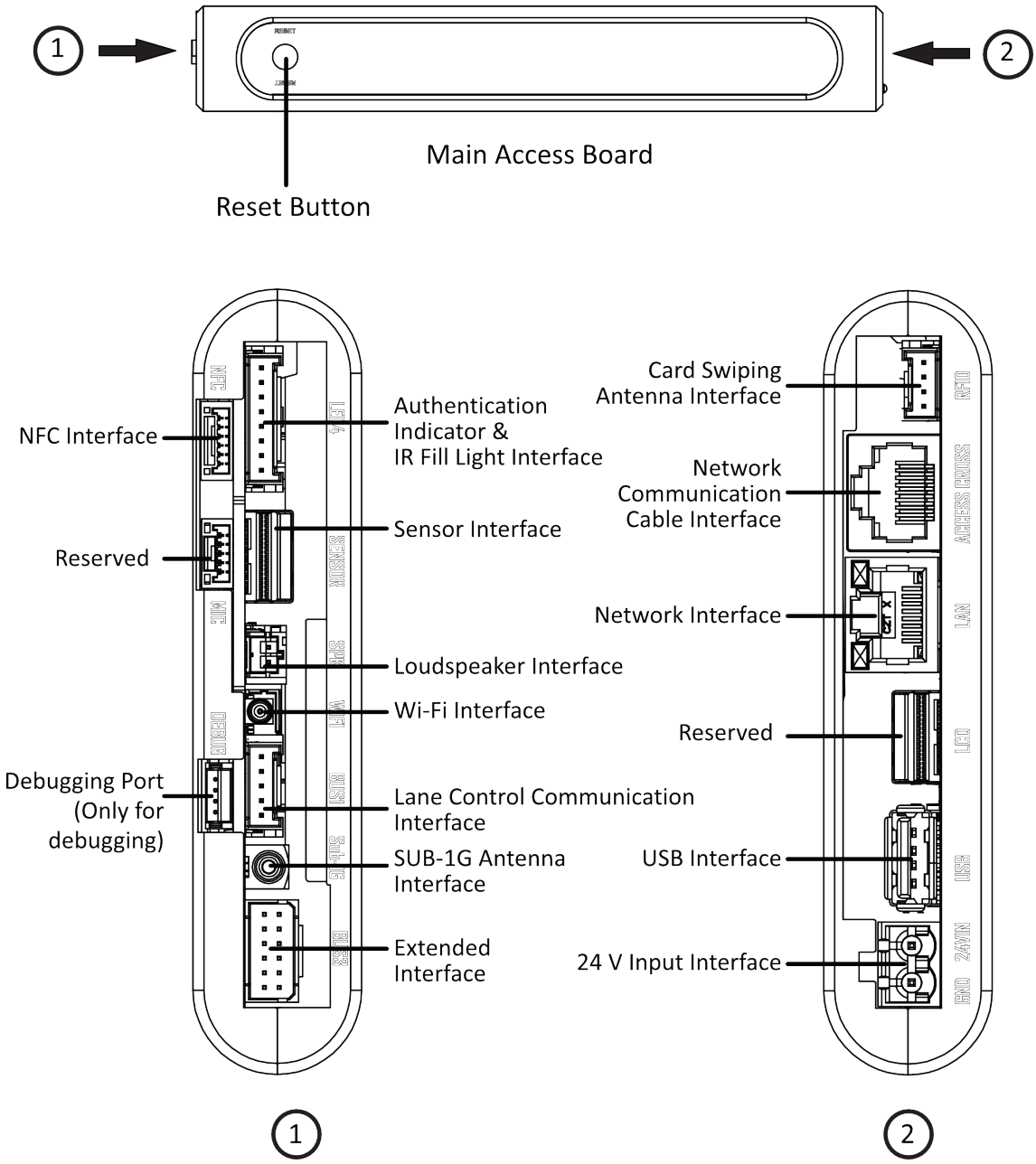

Figure 7-3 Main Access Board

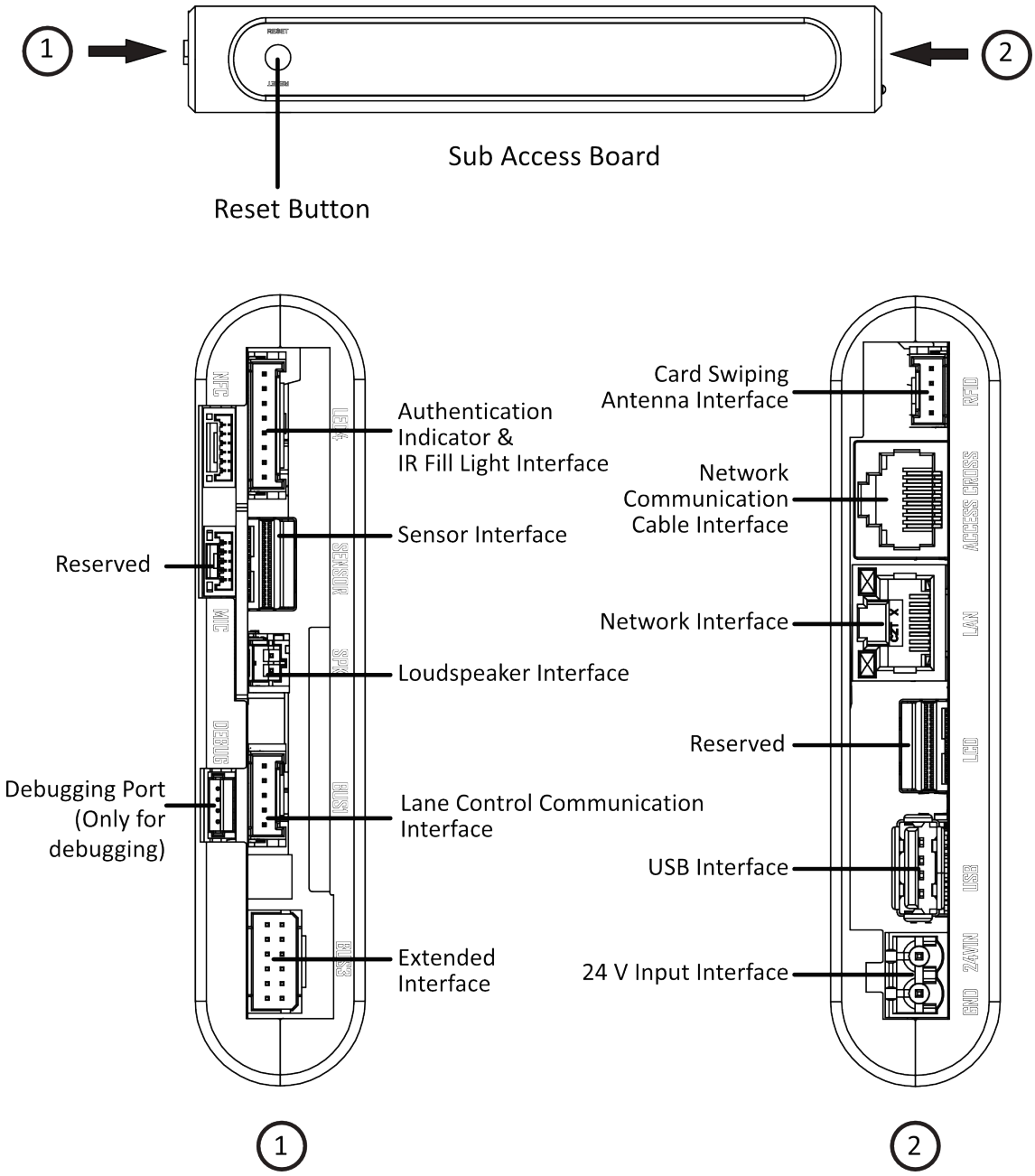

Figure 7-4 Sub Access Board

Note

- Hold the reset button for 5 s, the device will beep twice (main access board only) and start restoring to factory settings.
- You can connect the QR code scanner by the USB interface.

The wiring diagram of extended interface of access board is shown as follows.

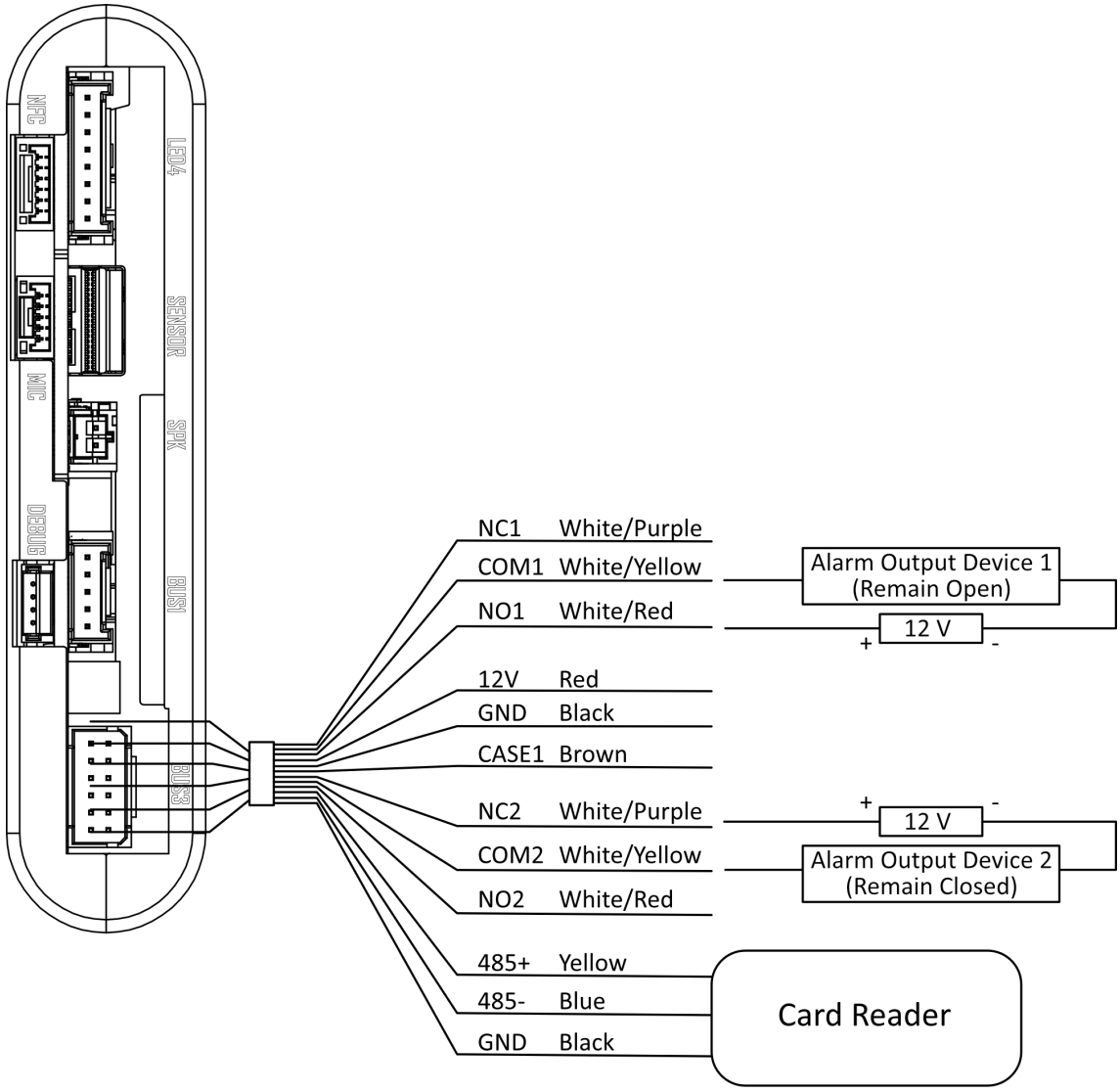

Figure 7-5 Wring Diagram of BUS3 Interface

7.2.4 Interface Board Description

The interface board can connect the card receiver, card reader, QR code scanner, people counting module, etc.

The interface board is shown as below:

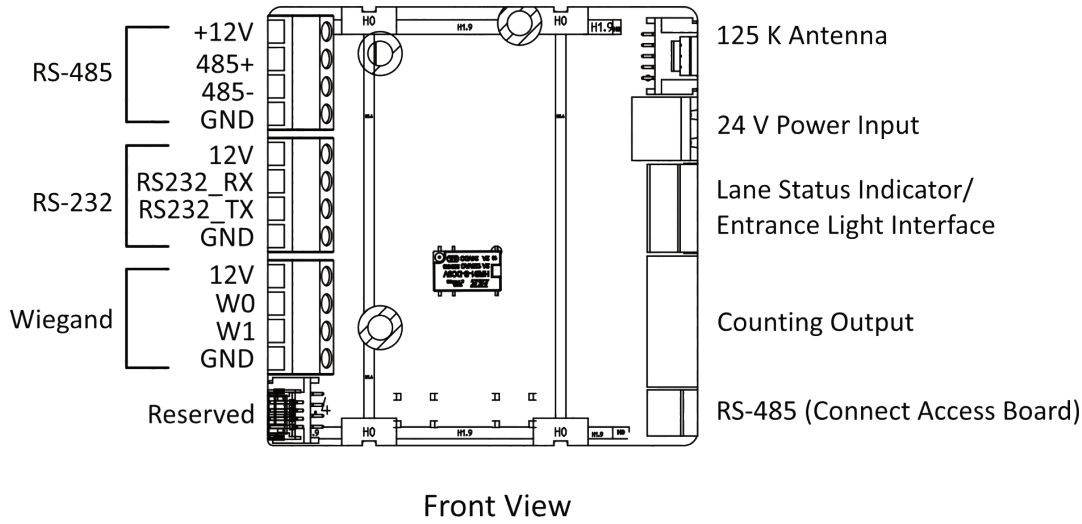

Figure 7-6 Interface Board (Front)

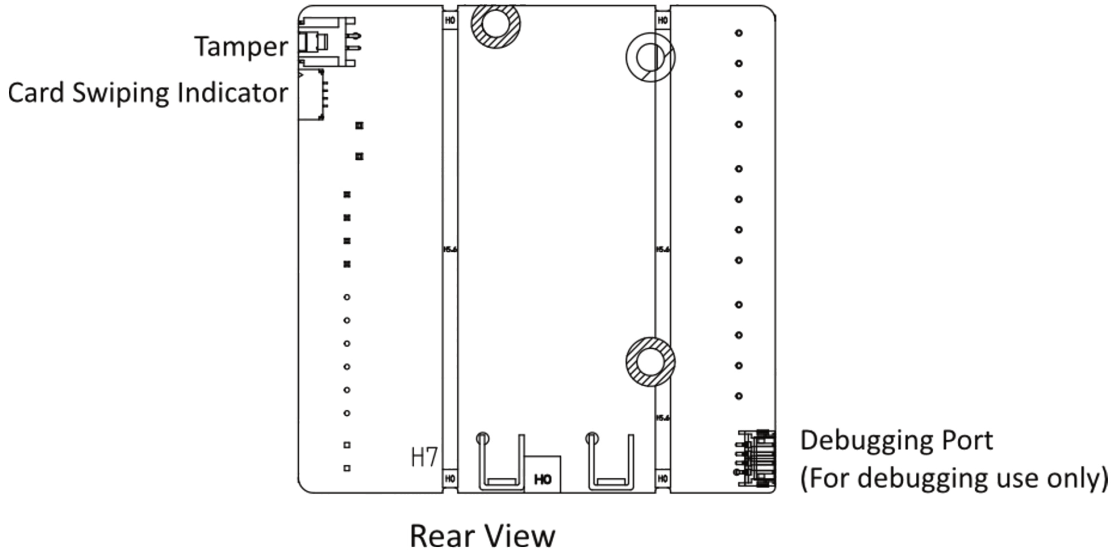

Figure 7-7 Interface Board (Rear)

7.2.5 Card Reader Module Wiring (Optional)

The card reader module can be connected to the access control board or interface board via RS-485 interface.

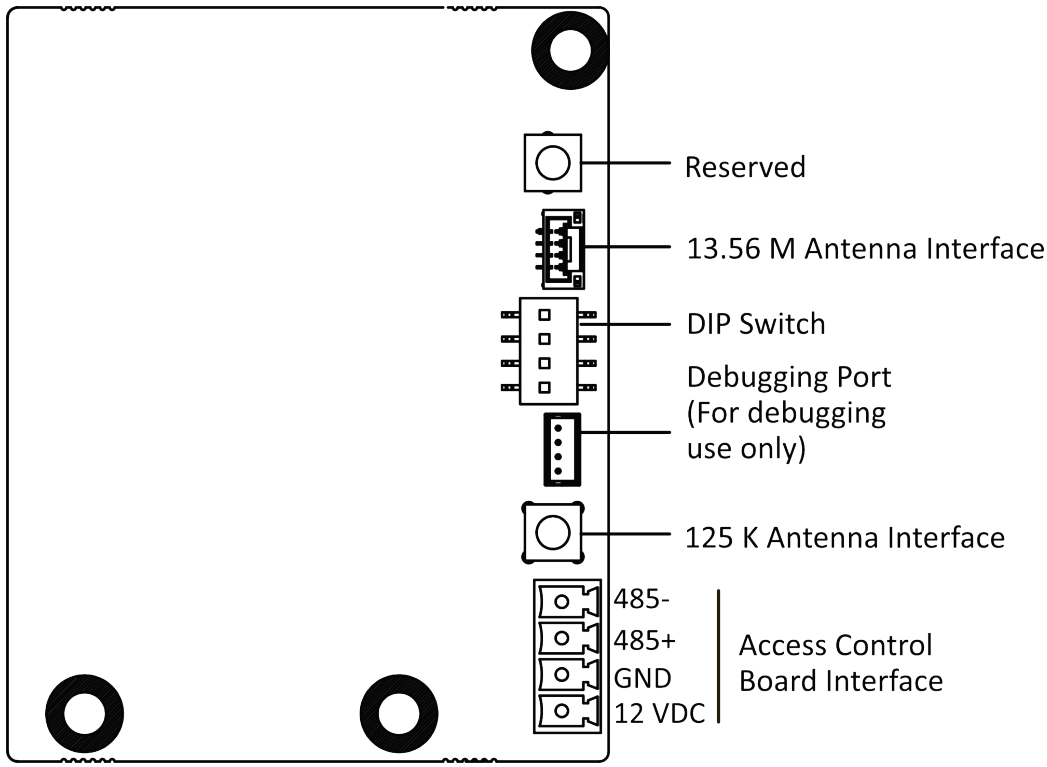

Figure 7-8 Card Reader Module

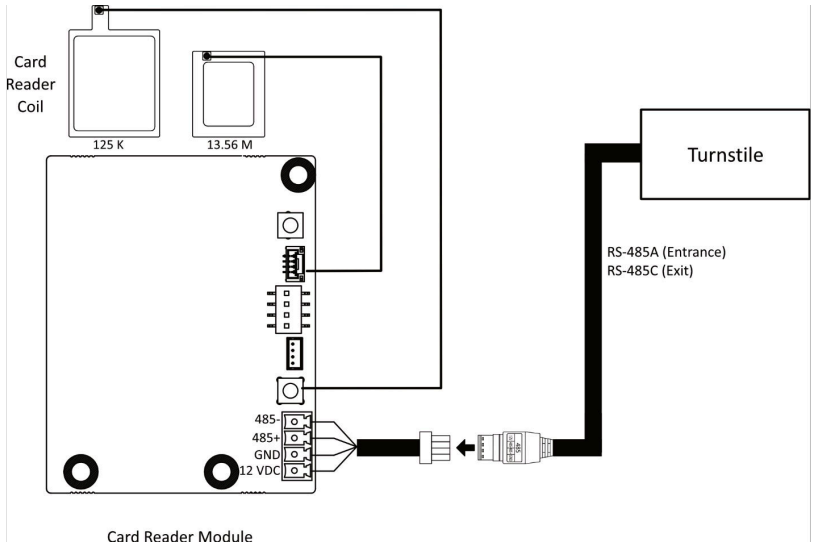

Figure 7-9 Wiring Diagram (With RS-485)

Note

- The wiring here is for reference only. For different turnstiles, the connection interface varies.
- RS-485 parameters cannot be configured. By default, the communication bitrate is 19200, the data bit is 8, the stop bit is 1, no odd even check.

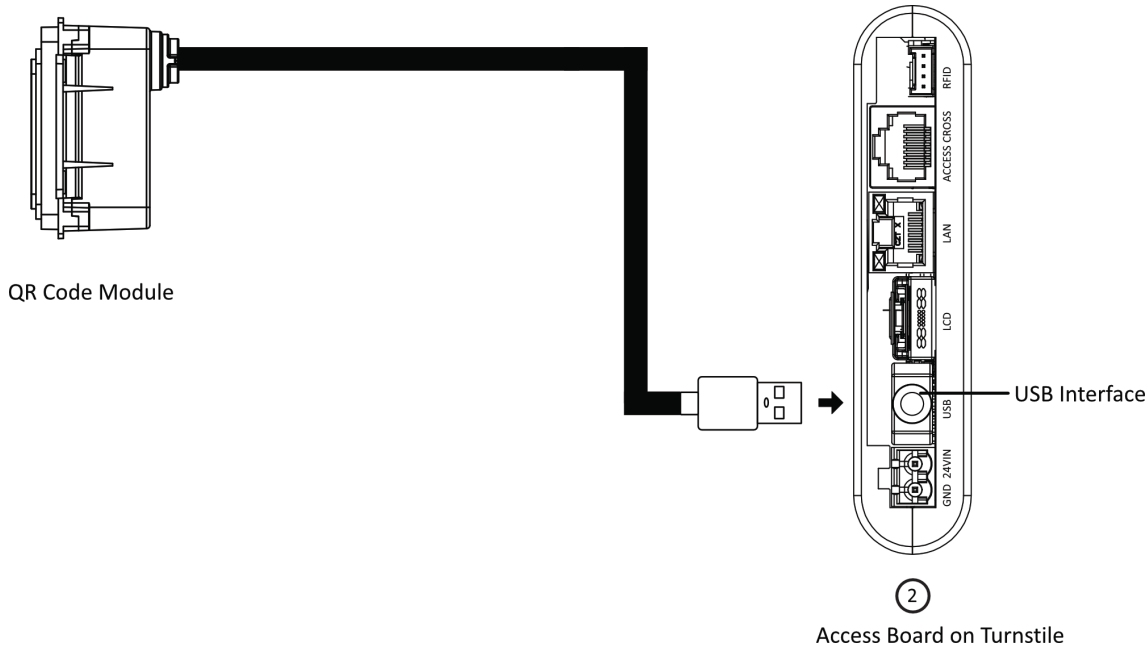

Figure 7-10 Wiring Diagram (With RS-485)

Note

The wiring here is for reference only. For different turnstiles, the connection interface varies.

7.2.6 Sub 1G Module Wiring (Optional)

The sub 1G module can be connected to the lane control board.

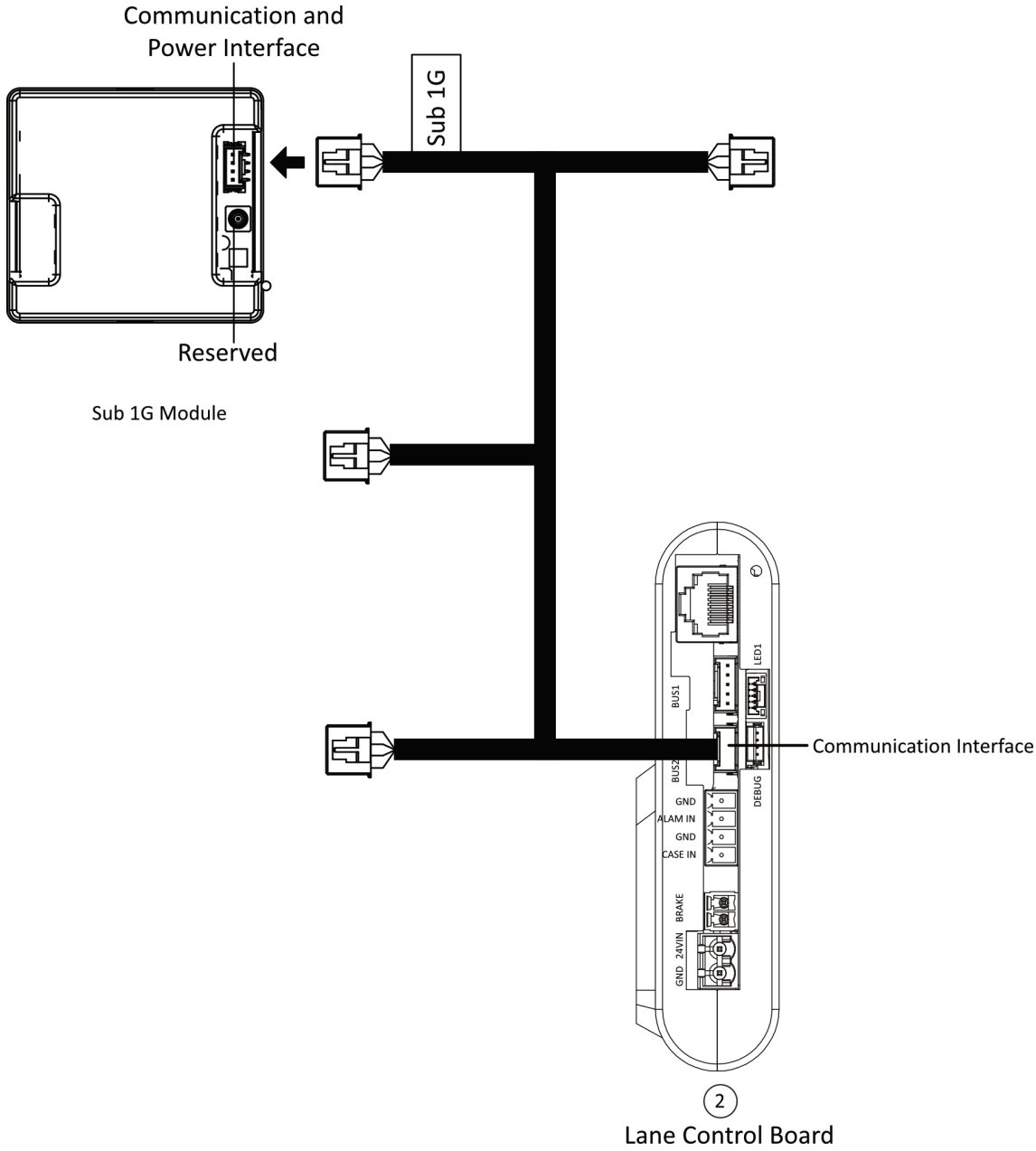

Figure 7-11 Sub 1G Module Wiring

7.2.7 QR Code Module Wiring

The QR code module can be connected to the access control board or interface board via RS-485 interface..

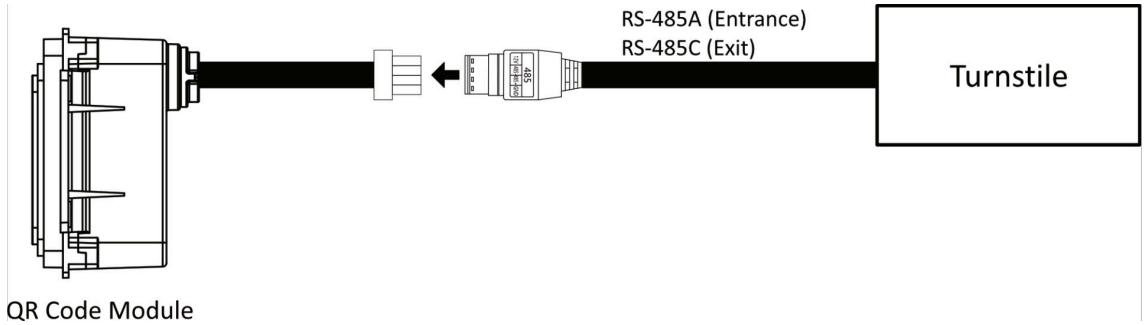

Figure 7-12 QR Code Module Wiring (With RS-485)

Note

- The wiring here is for reference only. For different turnstiles, the connection interface varies.
- RS-485 parameters cannot be configured. By default, the communication bitrate is 19200, the data bit is 8, the stop bit is 1, no odd even check.

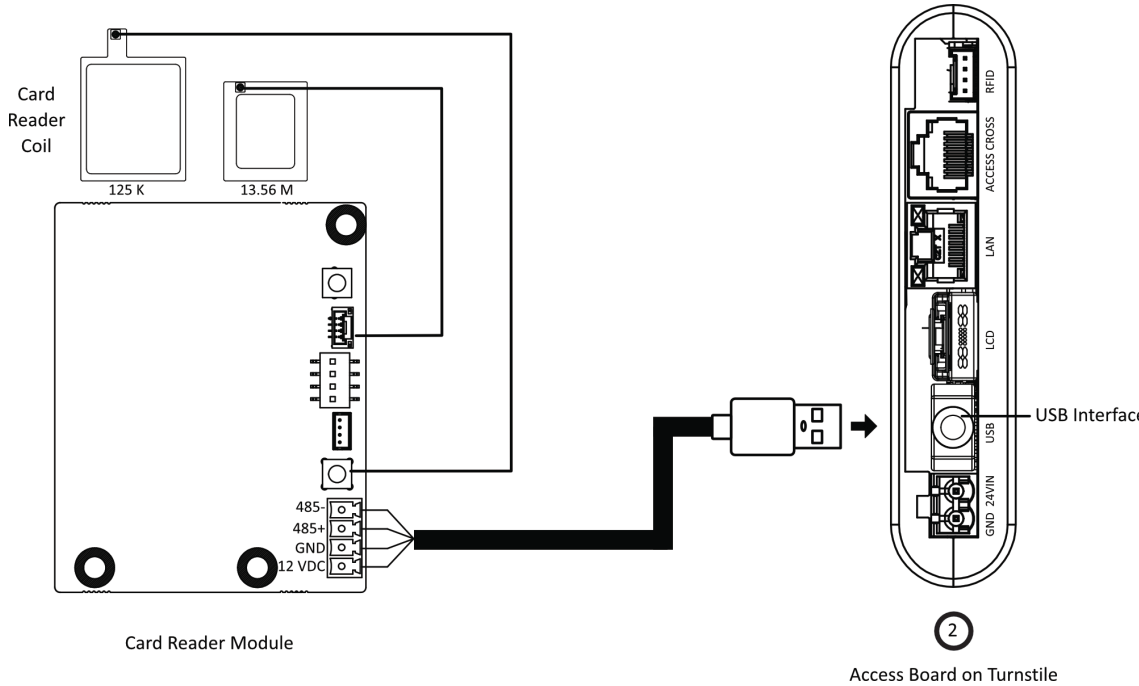

Figure 7-13 QR Code Module Wiring (With USB)

Note

The wiring here is for reference only. For different turnstiles, the connection interface varies.

7.2.8 Alarm Input Wiring

On the main user extended interface board, you can wire the fire alarm input interface.

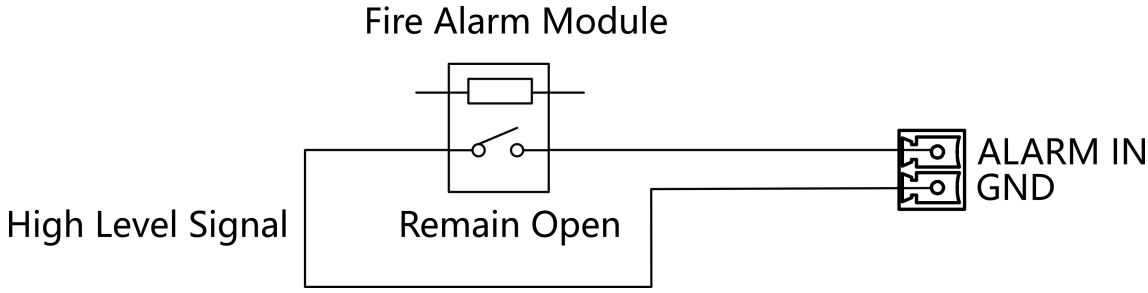

Figure 7-14 Remaining Open

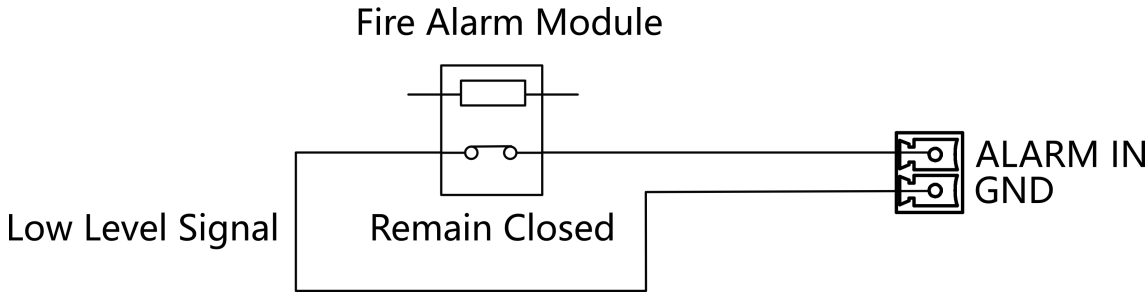

Figure 7-15 Remaining Closed

7.2.9 Exit Button Wiring

You can view the exit button wiring diagram.

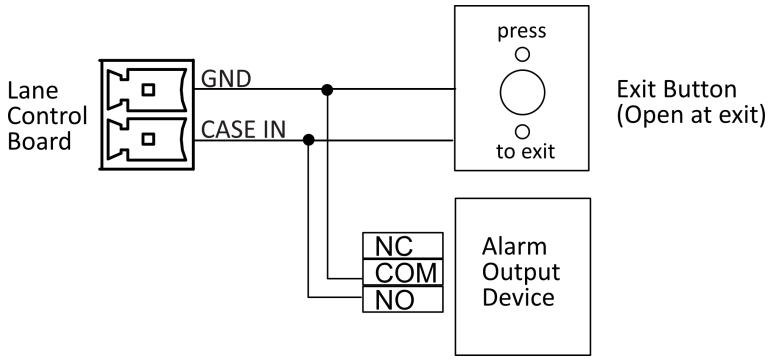

Figure 7-16 Exit Button Wiring

7.3 Reset Device

Steps

1. Hold the reset button.

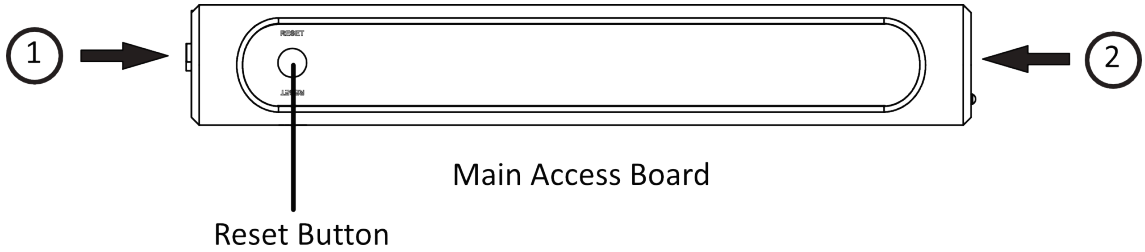

Figure 7-17 Initialization Reset Position

2. Hold the reset button for 5 s, the device will beep twice (main access board only) and start restoring to factory settings.

Caution

The initialization of the device will restore all the parameters to the default setting and all the device events are deleted.

Note

Make sure no persons are in the lane when powering on the device.

The resetting is completed.

Chapter 8 Indicator Description

Passing Indicator

Table 8-1 Indicator Descriptions (Carding Swiping Area)

Indicator	Status
Solid Blue	Controlled
Flashing Blue	Inductive/Remain Open/Barrier-Free
Solid Red	Remain Closed

Table 8-2 Indicator Descriptions (Around Camera)

Indicator	Status
Flashing Red until Alarm Dismissed	Fire Alarm Triggered/Climbing Over Barrier/ Tailing/Reverse Passing/Intrusion/Overstaying
Flashing Green	Fire Alarm Triggered and Barriers Open
Flashing Yellow	Person Not Staring at Camera/Person outside Face Recognition Area
Flashing Red	Person Not Authentication and Enter the Lane
Flashing Green	Authentication Completed
Red Indicator Flashing 3 Times	Authentication Failed

Chapter 9 Activation

You should activate the device before the first login. After powering on the device, the system will switch to Device Activation page.

Activation via the device, SADP tool and the client software are supported.

The default values of the device are as follows:

- The default IP address: 192.0.0.64
- The default port No.: 8000
- The default user name: admin

9.1 Activate via Web Browser

You can activate the device via the web browser.

Steps

1. Enter the device default IP address (192.0.0.64) in the address bar of the web browser, and press **Enter**.

   Note

   Make sure the device IP address and the computer's should be in the same IP segment.

2. Create a new password (admin password) and confirm the password.

   Caution

   - The password strength of the device can be automatically checked. We highly recommend you change the password of your own choosing (using a minimum of 8 characters, including at least three kinds of following categories: upper case letters, lower case letters, numbers, and special characters) in order to increase the security of your product. And we recommend you change your password regularly, especially in the high security system, changing the password monthly or weekly can better protect your product.
   - Proper configuration of all passwords and other security settings is the responsibility of the service provider and/or end-user.
   - Do not contain following characters in the password: the user name, 123, admin (case-insensitive), 4 or more continuously increasing or decreasing digits, or 4 or more consecutively repeated characters.
   - Password cannot contain words such as hik, hkws, and hikvision (case insensitive).

3. Click **Activate**.
4. Edit the device IP address. You can edit the IP address via the SADP tool, the device, and the client software.

9.2 Activate via Mobile Web

You can activate the device via mobile web.

Steps

1. If device hotspot is disabled: Make sure your mobile phone and the device are connected to the same network. Place your phone to the NFC area and the device IP address will pop up, tap the address to go to the login page.
2. If device hotspot is enabled:
   - Android System: Place your phone to the NFC area and the name and password of the device hotspot will be obtained automatically. Confirm to connect, you will go to the login page.
   - iOS Ssystem: Enable the phone's Wi-Fi function, and connect to the current device's hotspot. After hotspot is connected, you will go to the login page.

   Note

   - Hotspot Name: AP_Serial No.
   - Hotspot Password: Device's Serial No.

   Caution

   STRONG PASSWORD RECOMMENDED-We highly recommend you create a strong password of your own choosing (using a minimum of 8 characters, including upper case letters, lower case letters, numbers, and special characters) in order to increase the security of your product. And we recommend you reset your password regularly, especially in the high security system, resetting the password monthly or weekly can better protect your product.

   Note

   Characters containing admin and nimda are not supported to be set as activation password.
3. Create a new password (admin password) and confirm the password.

   Caution

   STRONG PASSWORD RECOMMENDED-We highly recommend you create a strong password of your own choosing (using a minimum of 8 characters, including upper case letters, lower case letters, numbers, and special characters) in order to increase the security of your product. And we recommend you reset your password regularly, especially in the high security system, resetting the password monthly or weekly can better protect your product.

   Note

   Characters containing admin and nimda are not supported to be set as activation password.
4. Click **Activate**.
5. You can configure the turnsile basic parameters, keyfob settings, light settings, network settings, access control settings, etc.

9.3 Activate via SADP

SADP is a tool to detect, activate and modify the IP address of the device over the LAN.

Before You Start

- Get the SADP software from the supplied disk or the official website ***http://www.hikvision.com/en/*** , and install the SADP according to the prompts.
- The device and the PC that runs the SADP tool should be within the same subnet.

The following steps show how to activate a device and modify its IP address. For batch activation and IP addresses modification, refer to *User Manual of SADP* for details.

Steps

1. Run the SADP software and search the online devices.
2. Find and select your device in online device list.
3. Input new password (admin password) and confirm the password.

Caution

STRONG PASSWORD RECOMMENDED-We highly recommend you create a strong password of your own choosing (using a minimum of 8 characters, including upper case letters, lower case letters, numbers, and special characters) in order to increase the security of your product. And we recommend you reset your password regularly, especially in the high security system, resetting the password monthly or weekly can better protect your product.

4. Click **Activate** to start activation.

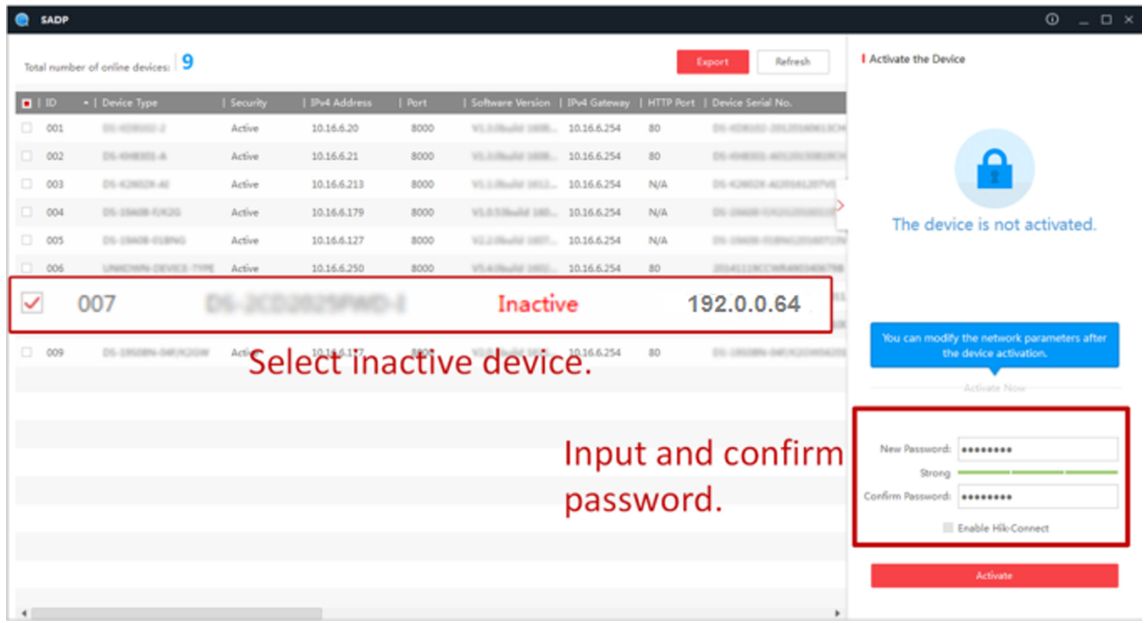

Status of the device becomes **Active** after successful activation.

5. Modify IP address of the device.

1) Select the device.
2) Change the device IP address to the same subnet as your computer by either modifying the IP address manually or checking **Enable DHCP**.
3) Input the admin password and click **Modify** to activate your IP address modification.

Chapter 10 Configure the Device via the Mobile Web

10.1 Login

You can login via mobile browser.

Note

Make sure the device is activated.

If device hotspot is disabled: Make sure your mobile phone and the device are connected to the same network. Place your phone to the NFC area and the device IP address will pop up, tap the address to go to the login page.

If device hotspot is enabled:

Android System: Place your phone to the NFC area and the name and password of the device hotspot will be obtained automatically. Confirm to connect, you will go to the login page.

iOS Ssystem: Enable the phone's Wi-Fi function, and connect to the current device's hotspot. After hotspot is connected, you will go to the login page.

Hotspot Name: AP_Serial No.

Hotspot Password: Device's Serial No.

10.2 Overview

You can view the device status, conduct remote control, etc.

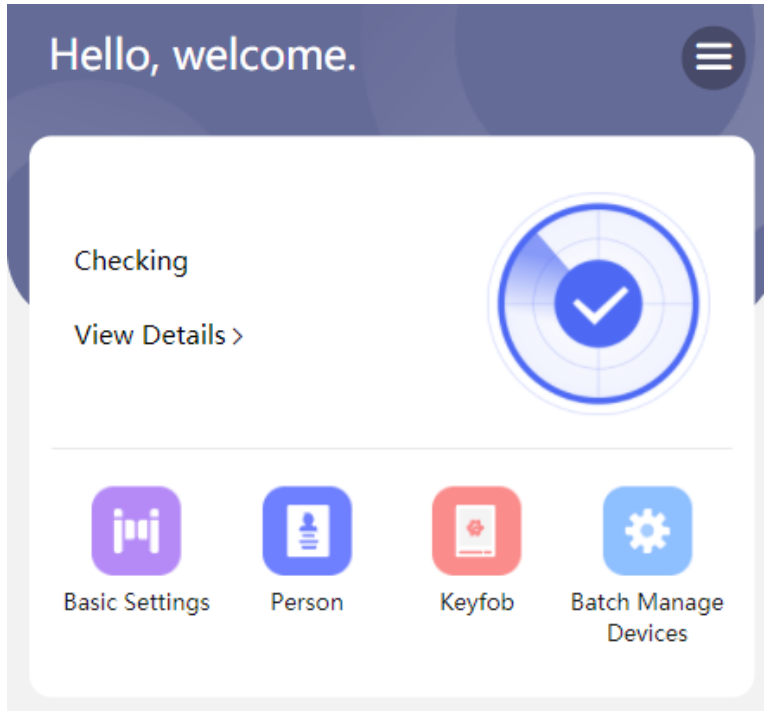

Figure 10-1 Status and Quick Settings

You can view the device status. If there is exception, you can tap to view the component details.

You can tap to fast enter the basic settings page, user page, keyfob page and network page batch device management page.

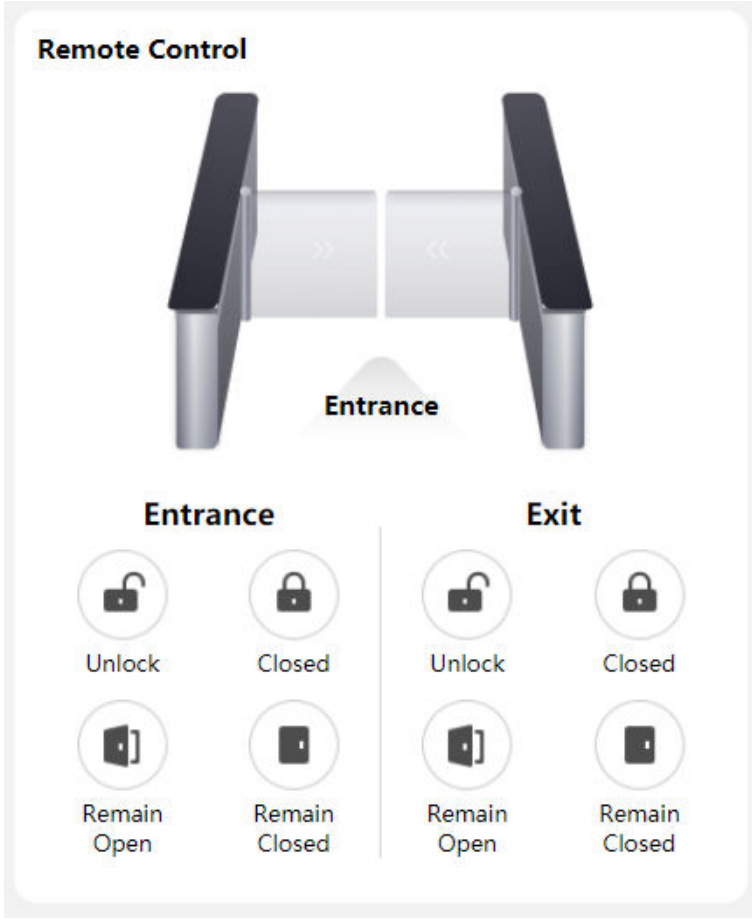

Figure 10-2 Remote Control

You can remotely control barrier by tap the icons.

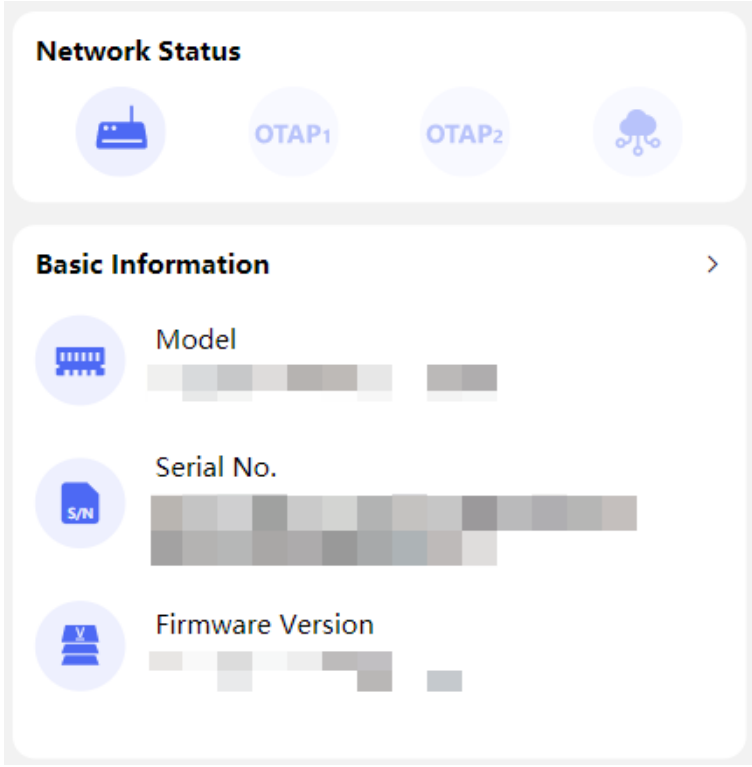

Figure 10-3 Network Status and Basic Information

You can view network status, model, serial No. and firmware version, and you can tap to fast enter the basic information page.

10.3 Configuration

10.3.1 Turnstile Basic Settings

You can set the basic parameters of the turnstile.

Tap **Basic Settings** of the shortcut entry on the overview page or tap → **Basic Settings** .

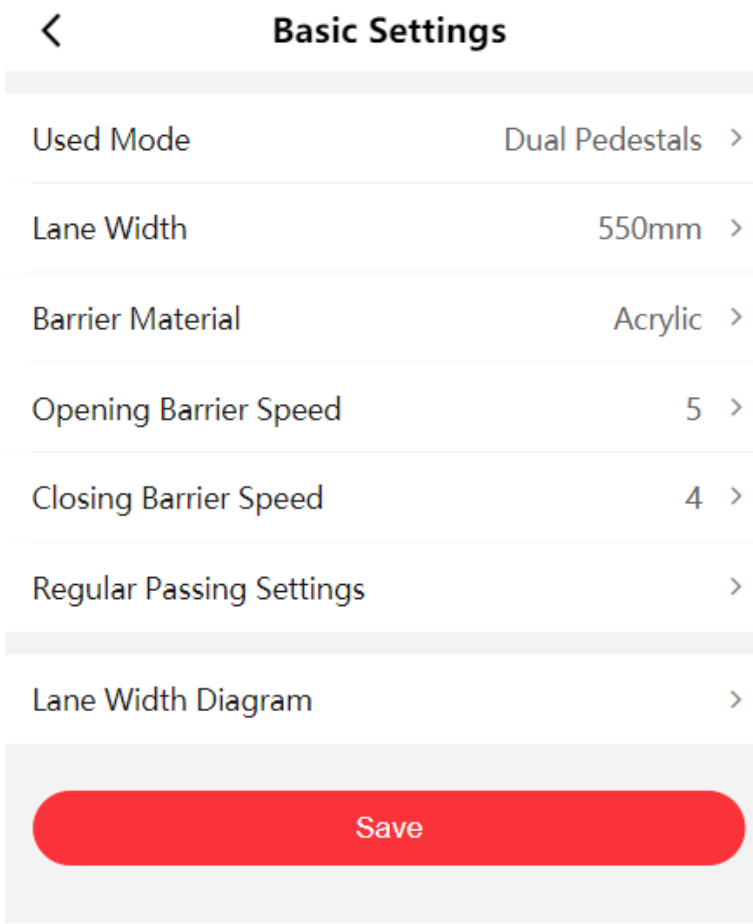

Figure 10-4 Turnstile Basic Parameters

Set **Used Mode**, **Lane Width**, **Barrier Material**, **Barrier Opening Speed** and **Barrier Closing Speed**.

Used Mode

Select **Single Pedestal** or **Dual Pedestals** according to actual needs.

Single Pedestal

When you only use one pedestal, you should select this option.

Dual Pedestals

When you only use dual pedestals, you should select this option.

Barrier Material

Select a barrier material according to actual situation.

Lane Width

Select a lane width according to actual situation.

Barrier Opening Speed/Barrier Closing Speed

Set the barrier opening or closing speed.

Tap **Regular Passing Settings** to set the entrance and exit's passing mode.

Tap **Lane Width Diagram** to view the device diagram.

Tap **Save**.

10.3.2 Person Management

You can add, edit, delete, and search person via mobile Web browser.

Steps

1. Tap **Person** of the shortcut entry or tap ≡ → **Person Management** to enter the settings page.

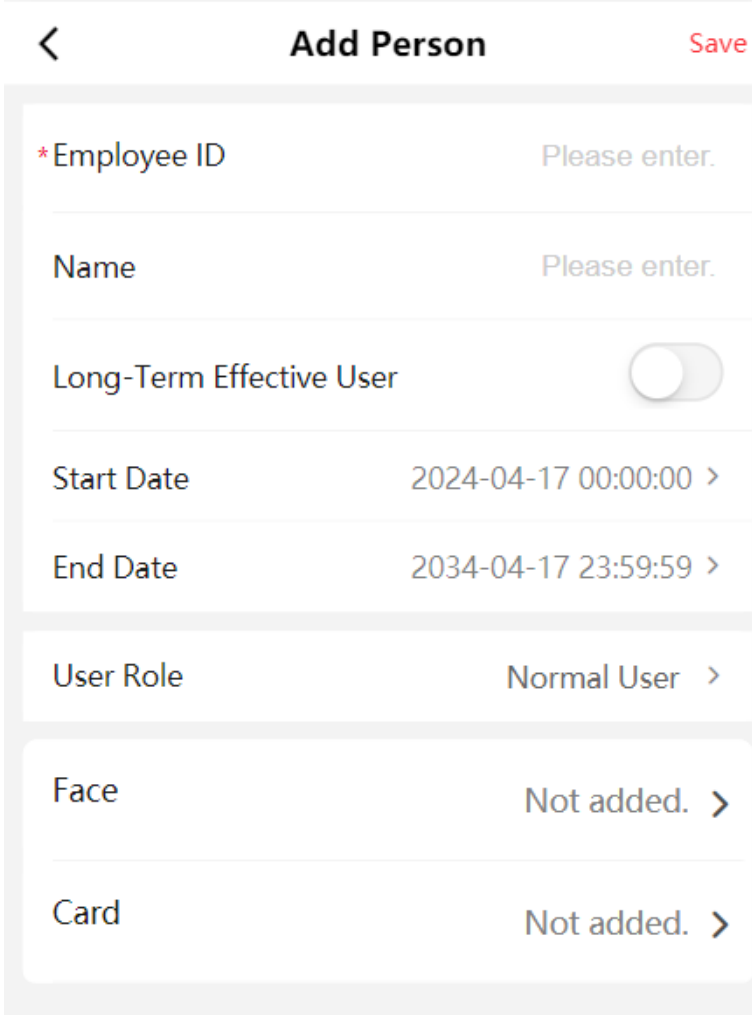

Figure 10-5 Add Person

2. Add person.

1) Tap**+**.

2) Set the following parameters.

Employee ID

Enter the employee ID. The Employee ID cannot be 0 or exceed 32 characters. It can be a combination of uppercase, lowercase letters and numbers.

Name

Enter your name. The name supports numbers, uppercase and lowercase English, and characters. The name is recommended to be within 32 characters.

Long-Term Effective User

Set the user permission as long-term effective.

Start Date/End Date

Set **Start Date** and **End Date** of user permission.

User Role

Select your user role.

Face

Add face picture. Tap **Camera** or **Choose from Album** to add a face picture for the person.

Card

Add card. Tap **+**. Enter the **Card No.**, and select the **Card Type**. Tap **Save** to add the card.

3) Tap **Save**.

3. Tap the user that needs to be edited in the user list to edit the information.

4. You can search the user by entering the employee ID in the search bar.

10.3.3 Keyfob Settings

Tap **Keyfob** of the shortcut entry on the overview page.

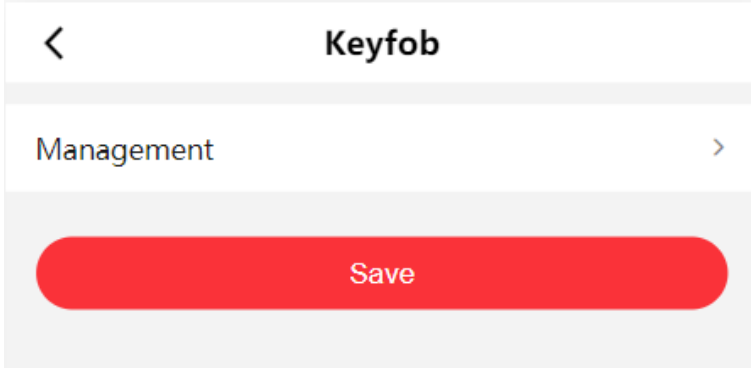

Figure 10-6 Keyfob Settings

Tap **Management** to enter the page. Tap **+ → Manually Add** to add a keyfob. Set keyfob's name, serial No. and remain open permission.

Tap **Save**.

10.3.4 Device Management

The mobile web can automatically detect online devices (main access controller) that are in the same network segment as the current mobile phone and automatically obtain the identified device information. You can view the model, activation status, IP, serial number, software version, gateway address, and IPv4 subnet mask of all devices in the same network segment. You can also view a single device's IP address of the main/sub access controller, synchronize the parameters with the sub access controller of the device, and edit the name of the main access controller of a the device. Batch network configuration, parameter synchronization, and device activation are also available for devices.

Tap**Batch Manage Devices** or tap ≡ → **Device Management** → **Batch Manage Devices** to enter the page.

Inactivated Device

You can do the following operations for the inactivated devices.
Tap 🔧 and set the main access controller’s network of the device. Enter the administrator's password and tap **OK**.

DHCP

If disable the function, you should manually set IPv4 address, IPv4 subnet mask, and IPv4 default gateway.

If enabled the function, the system will allocate IPv4 address, IPv4 subnet mask, and IPv4 default gateway.

IPv6 Mode

Manual

Manually set IPv6 address, IPv6 subnet prefix length, and IPv6 default gateway.

DHCP

The system will allocate IPv6 address, IPv6 subnet prefix length, and IPv6 default gateway.

Route Advertisement

A mechanism for automatic address configuration in the IPv6 protocol stack. The device can complete IPv6 address configuration as long as there are routers in the environment that can provide routing notification messages.

Click **View Route Advertisement** to view the IPv6 address list.

Activated Devices

You can do the following operations for the activated devices.
Click a device in the list. Tap **Network Settings**. You can view the main access controller and sub access controller’s basic information and set the network. Enter the administrator's password and tap **OK**.

DHCP

If disable the function, you should manually set IPv4 address, IPv4 subnet mask, and IPv4 default gateway.

If enabled the function, the system will allocate IPv4 address, IPv4 subnet mask, and IPv4 default gateway.

IPv6 Mode

Manual

Manually set IPv6 address, IPv6 subnet prefix length, and IPv6 default gateway.

DHCP

The system will allocate IPv6 address, IPv6 subnet prefix length, and IPv6 default gateway.

Route Advertisement

A mechanism for automatic address configuration in the IPv6 protocol stack. The device can complete IPv6 address configuration as long as there are routers in the environment that can provide routing notification messages.

Click **View Route Advertisement** to view the IPv6 address list.

Click a device in the list. Tap **Sync Parameters**. You can synchronize the selected device with this device. Enter the administrator's password and tap **Confirm**.
Tap and you can set the name of the main access controller of the device. Enter the administrator's password and tap **Save**.

Batch Settings

You can do the following batch operations for devices.
On the Activated page, tap **Set Network Parameters**. Select the devices that you need to set network, and tap **Set Network Parameters**. After network settings, tap **OK**.

DHCP

If disable the function, you should manually set IPv4 address, IPv4 subnet mask, and IPv4 default gateway.

If enabled the function, the system will allocate IPv4 address, IPv4 subnet mask, and IPv4 default gateway.

IPv6 Mode

Manual

Manually set IPv6 address, IPv6 subnet prefix length, and IPv6 default gateway.

DHCP

The system will allocate IPv6 address, IPv6 subnet prefix length, and IPv6 default gateway.

Route Advertisement

A mechanism for automatic address configuration in the IPv6 protocol stack. The device can complete IPv6 address configuration as long as there are routers in the environment that can provide routing notification messages.

Click **View Route Advertisement** to view the IPv6 address list.

On the Activated page, tap **Batch Parameters Sync**. Select the devices that you need to set network, and tap **Batch Parameters Sync**. You can synchronize the selected devices with this device. Enter administrator's password and tap **Confirm**.
On the Inactivated page, tap **Batch Activate**. Select the devices that you need to activate, and tap **Batch Activate**. Enter administrator's password and tap **Confirm**.

10.3.5 View Device Basic Information

You can view the device name, language, model, serial No., version, and Mac address, etc.

Tap → **System Settings** → **Basic Information** .

You can change the device name.

You can view the device language, model, serial No., version, local RS-485 number, number of alarm input, number of alarm output, Mac address and factory information, etc.

Tap **Device Capacity** to view the quantity and capacity of person, card and event.

Tap **Save**.

10.3.6 Time Settings

View current time and set the time zone.

Tap → **System Settings** → **Time Settings** .

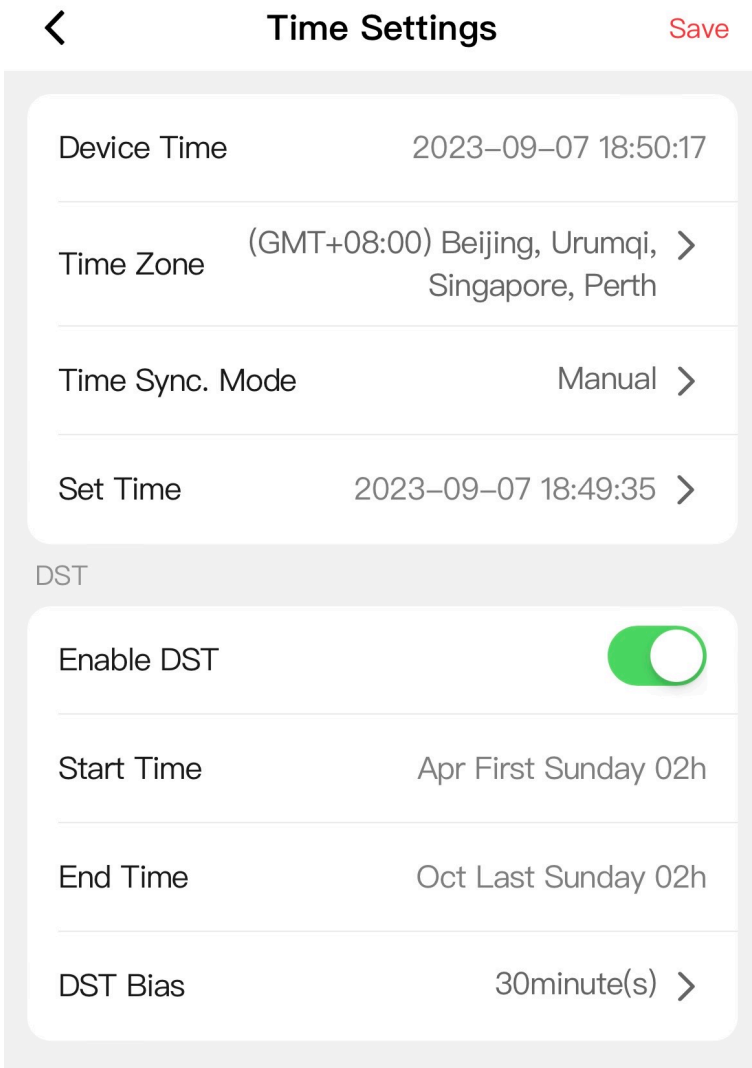

Figure 10-7 Time Settings

Device Time

You can view current time.

Time Zone

Select the time zone where the device is located from the drop-down list.

Time Sync. Mode

Manual

By default, the device time should be synchronized manually. You can set the device time manually.

NTP

Set the NTP server's IP address, port No., and interval.

DST

Slide to enable DST, and set the start time, end time and DST bias.

Tap **Save**.

10.3.7 User Management

You can change user password.

Tap → **User Management** on the home page.

Tap the user, enter the old password and create a new password, and confirm the password.

Tap **Save**.

10.3.8 Network

Wired Network

Set wired network.

Tap → **Network Settings** → **TCP/IP** to enter the configuration page.

NIC Type

Select a NIC type from the drop-down list.

DHCP

If you disable the function, you should set the IPv4 address, IPv4 subnet mask, IPv4 default gateway, IPv6 mode, IPv6 address, IPv6 subnet prefix length, IPv6 default gateway.

If you enable the function, the system will allocate the IPv4 address, IPv4 subnet mask, the IPv4 default gateway automatically.

MAC Address and MTU

You can view the default MAC address and MTU.

IPv6 Mode

Route Advertisement

The IPv6 address is generated by combining the route advertisement and the device Mac address.

Note

Route advertisement mode requires the support from the router that the device is connected to.

Manual

Enter **IPv6 Address**, **IPv6 Subnet Mask**, and **IPv6 Default Gateway**. Consult the network administrator for required information.

DHCP

The IPv6 address is assigned by the server, router, or gateway.

DNS Server

Note

Only when DHCP is enabled can DNS server be set.

Set the preferred DNS server and the alternate DNS server according to your actual need.

Set Device Hotspot

After enabling the device hotspot, you can use the mobile phone to connect the hotspot and set.

On the home page, tap → **Network Settings** → **Device Hotspot** .

Slide to **Enable Device Hotspot**, set hotspot's **Name**, enter password and confirm it. Tap **Save**.

Set Port Parameters

You can set the HTTP, HTTPS according to actual needs when accessing the device via network.

Tap → **Network Service** → **HTTP(S)** to enter the setting page.

HTTP

It refers to the port through which the browser accesses the device. For example, when the HTTP Port is modified to 81, you need to enter ***http://192.0.0.65:81*** in the browser for login.

HTTPS

Set the HTTPS for accessing the browser. Certificate is required when accessing.

Platform Access

Platform access provides you an option to manage the devices via platform.

Steps

1. Tap → **Device Access** → **Hik-Connect** to enter the settings page.

   Note

   Hik-Connect is an application for mobile devices. With the App, you can view live image of the device, receive alarm notification and so on.

2. Slide to enable the function.
3. You can enable **Custom** to enter the server address.

Note

- 6 to 12 letters (a to z, A to Z) or numbers (0 to 9), case sensitive. You are recommended to use a combination of no less than 8 letters or numbers.

4. You can view **Register Status** and **Binding Status**.
5. You can tap **Bind An Account → View QR Code** , scan the QR code to bind an acount.
6. Tap **Save** to enable the settings.

Set OTAP Parameters

Connect the device to the platform through the OTAP protocol to obtain device information, upload operation status and alarm information, restart and upgrade the device.

Steps

1. Tap ≡ → **Device Access → OTAP** .

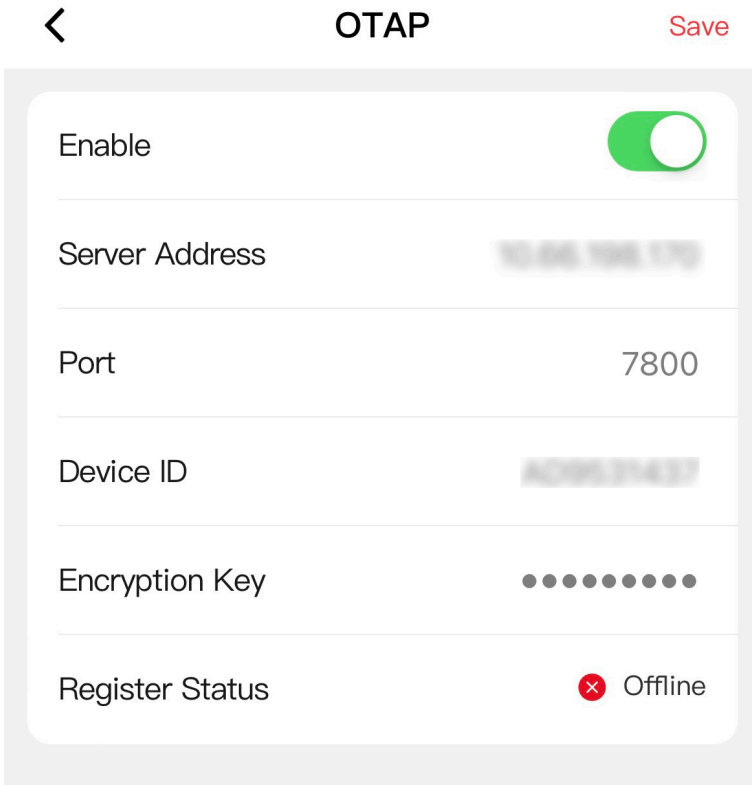

Figure 10-8 OTAP

2. Slide to **Enable**.
3. Set server address, port, device ID and encryption key.
4. Tap **Save**.
5. Refresh the page or reboot the device, and you can view the **Register Status**. Tap **Test** to test the register status.

Set Network Penetration Service

When the device is deployed on the LAN, penetration service can be enabled to achieve remote device management.

Steps

1. Tap ≡ → **Device Access** → **Network Penetration Settings** to enter the configuration page.
2. Enable **Enable Penetration Service**.
3. Enter **Server IP Address** and **Server Port**.
4. Enter login **User** and **Password**.
5. Set **Heartbeat Timeout**. The range is1 to 6000.
6. You can view **Online Status**. Click **Refresh** to view the latest status.
7. Tap **Save**.

10.3.9 Sub Access Control Board Settings

The mobile web automatically detects the sub access controller paired with the IP address of the current computer. You can view the information of the sub access controller of the device and set network parameters.

Steps

1. Tap ≡ → **Device Management** → **Sub Access Control Board** .
2. Tap **Network Settings** and set the IP address, gateway address, subnet mask, and communication port. Enter the administrator's password and tap **Save**.
3. Tap **Device Details** and you can view the device name, language, model, serial No., version, and alarm input/output number.

10.3.10 Event Search

Tap ≡ → **Event Search** .

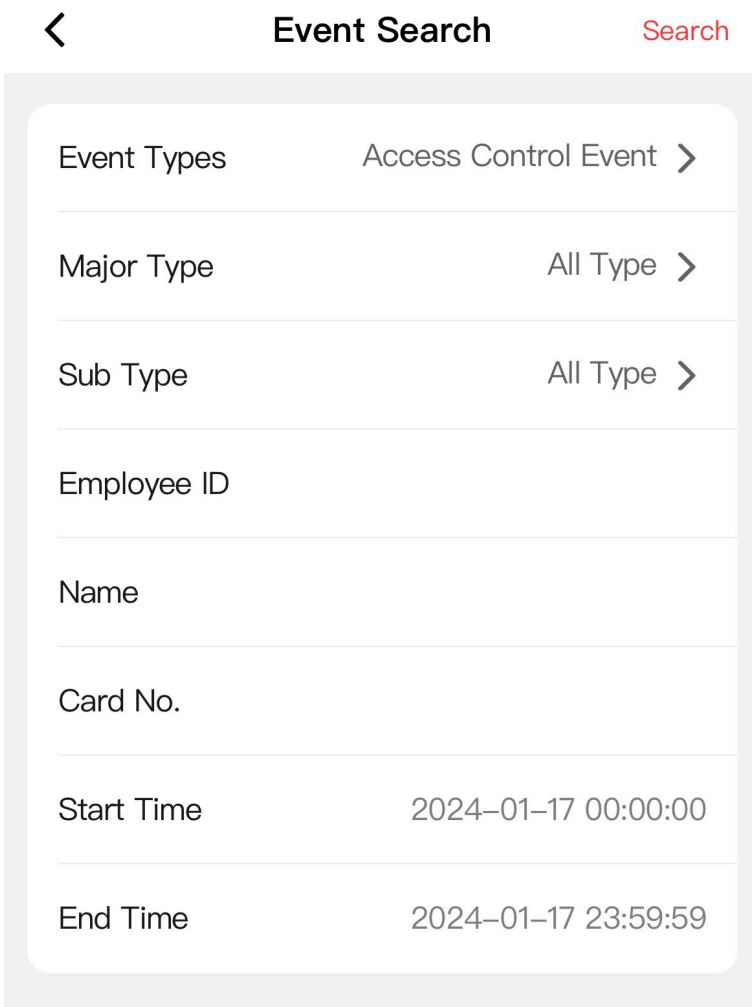

Figure 10-9 Event Search

Select event types, major type and sub type. Enter search conditions, including employee ID, name, card No., start time and end time. Tap **Search**.

Note

It supports searching for names within 128 digits.

The search results will be displayed in the list.

10.3.11 Set Audio

Set the device volume.

Steps

1. Tap ≡ → **Audio** to enter the settings page.

2. You can adjust the device output volume according to your actual needs.
3. You can enable voice prompt according to your actual needs.

10.3.12 Access Control Settings

Set Authentication Parameters

Set authentication parameters.

Steps

1. Tap ≡ → **Access Control** → **Authentication Settings** .

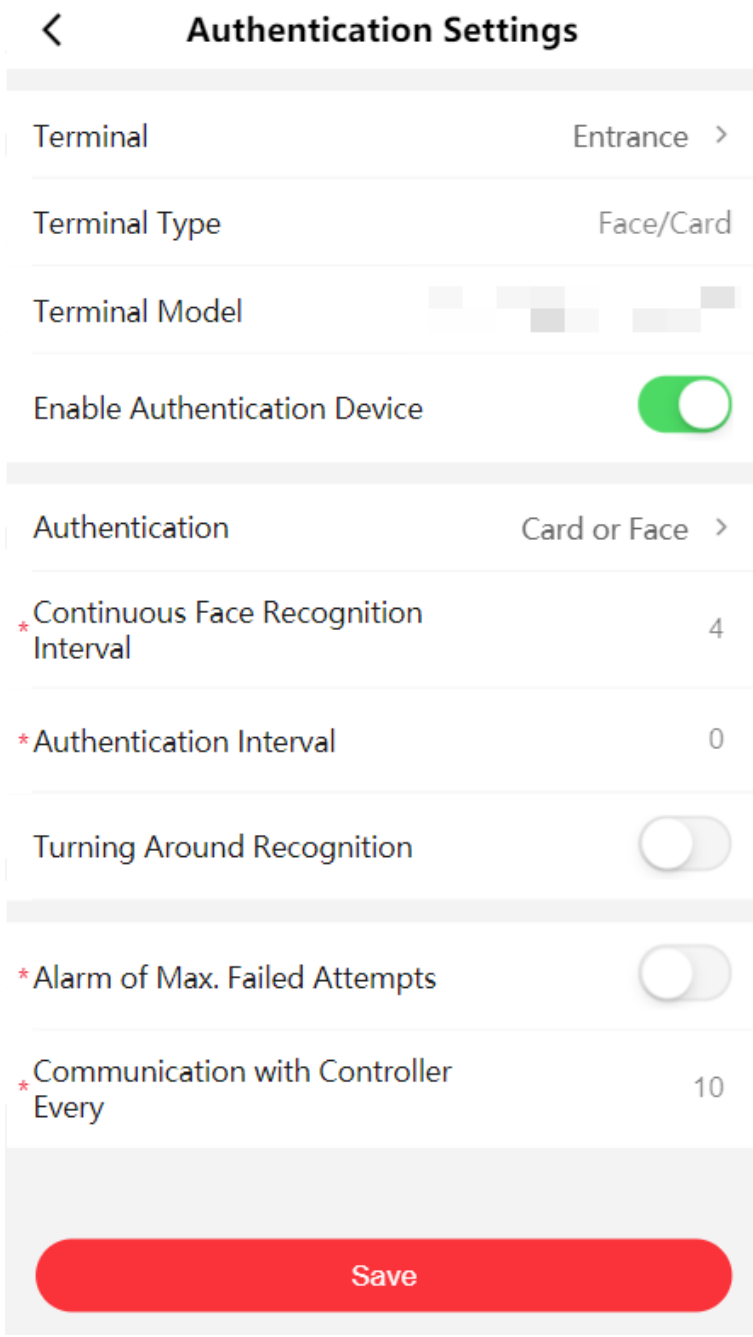

Figure 10-10 ⍰⍰配置

2. Tap **Save** after configuration.

Terminal

Choose **Entrance** or **Exit** for settings.

Terminal Type/Model

You can view the current terminal type and model.

Enable Authentication Device

The terminal can be used for card swiping normally when the function is enabled.

Authentication

Select an authentication mode according to your actual needs from the drop-down list.

Continuous Face Recognition Interval

You can set the interval between 2 continuous recognition of a same person during the authentication. In the configured interval, Person A can only recognized once. If another person (Person B) has recognized during the interval, Person A can recognized again.

Note

The recognition internal value ranges from 1 to 10.

Authentication Interval

You can set the authentication interval of the same person when authenticating. The same person can only authenticate once in the configured interval. A second authentication will be failed. If other people authenticate in the configured interval, this person can authenticate again.

Note

The configuration range is 0 to 255 s.

Turning Around Recognition

When enable the function, after authentication from one side, the device will not authenticate the passing person from the other side within the configured interval.

Alarm of Max. Failed Attempts

Enable to report alarm when the card reading attempts reach the set value.

Note

The configuration range is 1 to 10.

Communication with Controller Every

When the access control device cannot connect with the card reader for longer than the set time, the card reader will turn offline automatically.

Set Door Parameters

You can set door name, open duration and exit button parameters.

Tap → **Access Control** → **Door Parameters** .

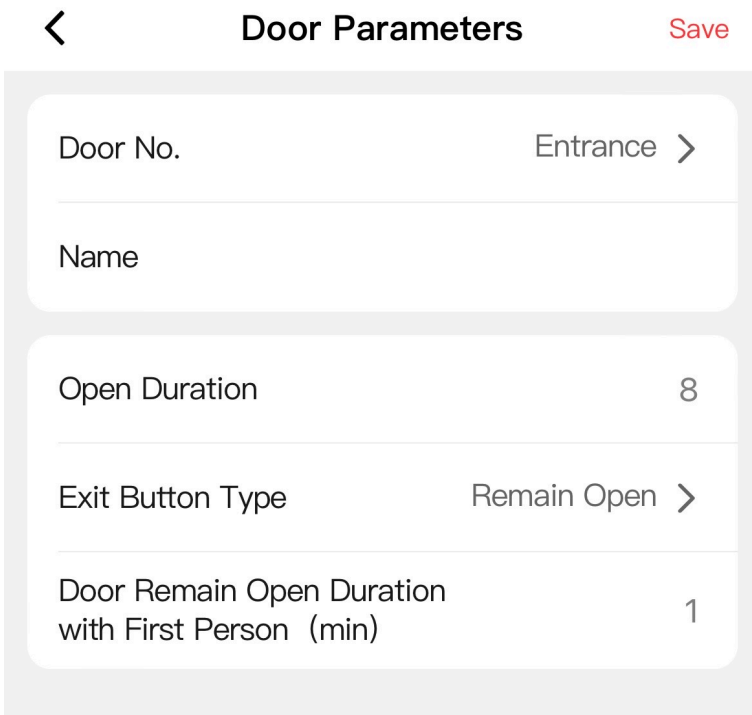

Figure 10-11 Door Parameters

Select entrance or exit for configuration, configure **Name** and **Open Duration**, and select **Exit Button Type**.

Configure **Door Remain Open Duration with First Person**. The mode is applicable for the passing of groups of persons, such as visitors entering the scenic spots. After the set person passes through, the door will open for a set time and other persons can pass through without authentication.

Click **Save** to save the settings after the configuration.

Terminal Settings

Set the working mode.

Tap ≡ → **Access Control** → **Terminal Parameters** to enter the settings page.

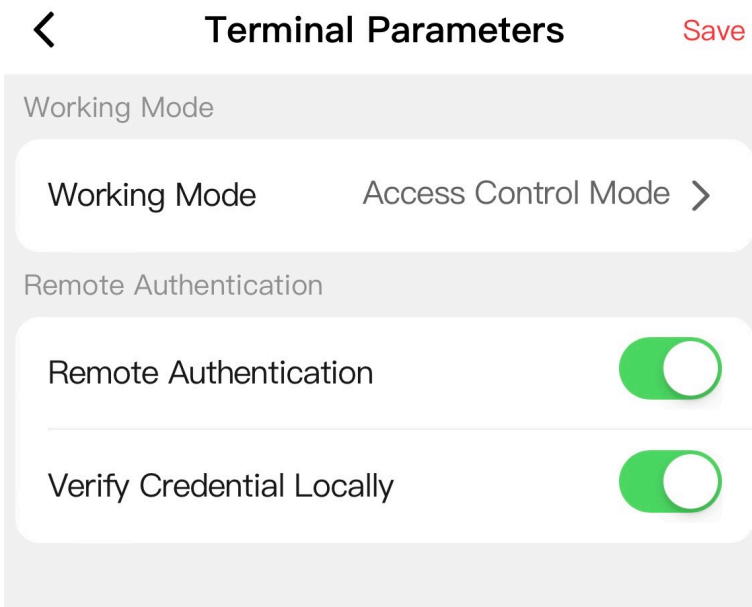

Figure 10-12 Terminal Parameters

Permission Free Mode

The device will not verify the person's permission, but only the person's validity period. If the person is in the validity period, the barrier will open.

You can enable **Verify Credential Locally**. After enabling the function, the device will only verify the person's permission without the schedule template, etc.

Access Control Mode

The device works normally and will verify the person's permission to open the barrier.

Remote Authentication

The device will upload the person's authentication information to the platform. The platform will judge to open the barrier or not.

Verify Credential Locally

The device will only verify the person's permission without the schedule template, etc.

Set Card Security

Configure cards for the device.

Tap → **Access Control** → **Card Security** .

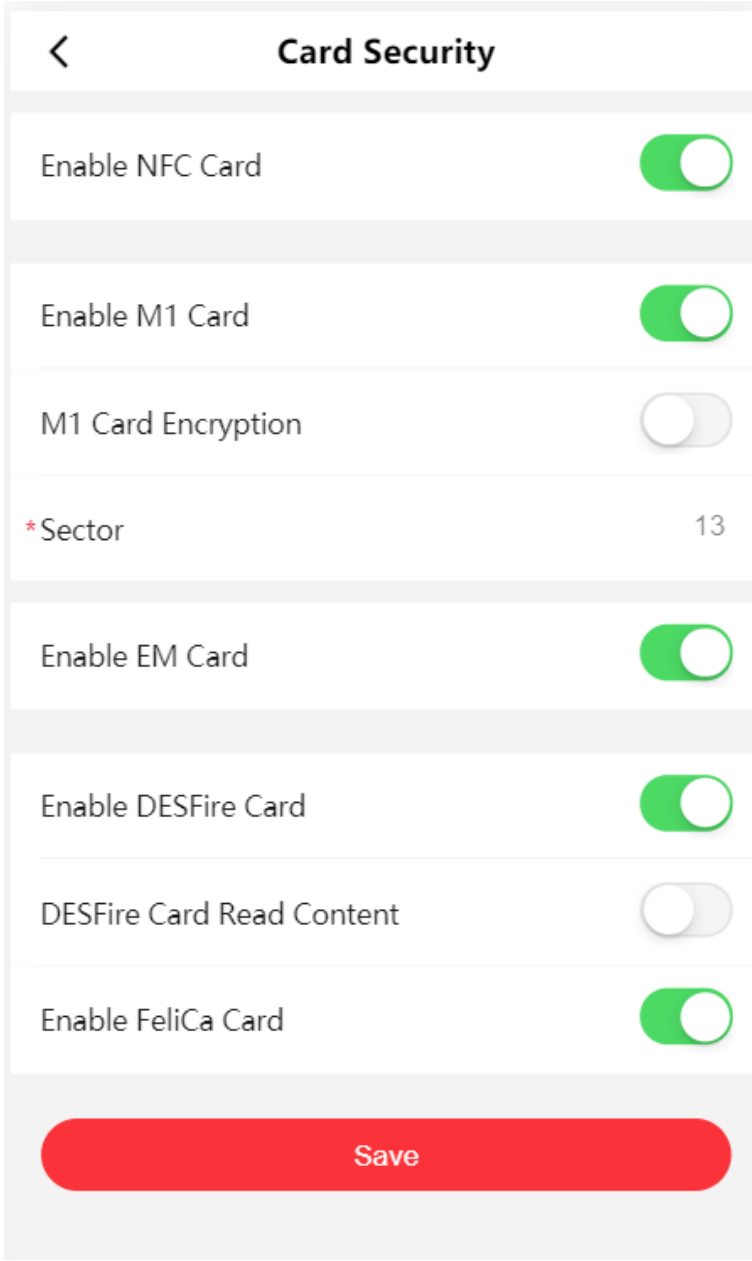

Figure 10-13 Card Security

Configure card parameters, and click **Save**.

Enable NFC Card

In order to prevent the mobile phone from getting the data of the access control, you can disable NFC card to increase the security level of the data.

Enable M1 Card

Enable M1 card and authenticating by presenting M1 card is available.

M1 Card Encryption

M1 card encryption can improve the security level of authentication.

Sector

Enable the function and set the encryption sector.

Note

It is recommended to encrypt sector 13.

Enable EM Card

Enable EM card and authenticating by presenting EM card is available.

Note

If the peripheral card reader supports presenting EM card, the function is also supported to enable/disable the EM card function

Enable DESFire Card

The device can read the data from DESFire card when enabling the DESFire card function.

DESFire Card Read Content

After enable the DESFire card content reading function, the device can read the DESFire card content.

Enable FeliCa Card

The device can read the data from FeliCa card when enabling the FeliCa card function.

10.3.13 Set Face Parameters

Tap → **Smart** → **Face Recognition Parameters** to enter the configuration page.

Note

The functions vary according to different models. Refers to the actual device for details.

Click **Save** to save the settings after the configuration.

Terminal

Select **Entrance** or **Exit** as the terminal direction.

Face Anti-spoofing

Enable or disable the live face detection function. If enabling the function, the device can recognize whether the person is a live one or not.

Note

Biometric recognition products are not completely applicable to anti-spoofing environments. If you require a higher security level, use multiple authentication modes.

Live Face Detection Security Level

After enabling the face anti-spoofing function, you can set the matching security level when performing live face authentication.

Recognition Distance

Select the distance between the authenticating user and the device camera.

Application Mode

Select either others or indoor according to actual environment.

1:1 Matching Threshold

Set the matching threshold when authenticating via 1:1 matching mode. The larger the value, the smaller the false accept rate and the larger the false rejection rate.

1:N Matching Threshold

Set the matching threshold when authenticating via 1:N matching mode. The larger the value, the smaller the false accept rate and the larger the false rejection rate.

Face Recognition Timeout Value

Set the timeout value when face recognizing. If the face recognition time is longer than the configured value, the system will pop up a prompt.

Face Recognition Area

You can set the face recognition area when authentication.

Select the terminal as **Entrance** or **Exit**.

Set **Margin (Left)**, **Margin (Right)**, **Margin (Top)**, and **Margin (Bottom)**. When authenticating, the person should in the configured area. Tap **Save**.

10.3.14 Set ECO Mode

After enabling the ECO mode, the device will use the IR camera to authenticate faces in the low light or dark environment.

Tap ≡ → **Smart** → **ECO Mode Settings** to enter the configuration page.

Note

The functions vary according to different models. Refers to the actual device for details.

Click **Save** to save the settings after the configuration.

Terminal

Select **Entrance** or **Exit** as the terminal direction.

ECO Mode

After enabling the ECO mode, the device will use the IR camera to authenticate faces in the low light or dark environment. And you can set the ECO mode threshold, ECO mode (1:N), and ECO mode (1:1).

Enable Mode

You can set **Auto** or **Time to Sleep** to enable the ECO mode.

When you select **Time to Sleep**, you should tap **Time Schedule** to set the time duration that the device will enable ECO mode. Tap **Save**.

ECO Mode Threshold

The larger the value, the device enter the ECO Mode easier.

ECO Mode (1:1) Threshold

Set the matching threshold when authenticating via ECO mode 1:1 matching mode. The larger the value, the smaller the false accept rate and the larger the false rejection rate.

ECO Mode (1:N) Threshold

Set the matching threshold when authenticating via ECO mode 1:N matching mode. The larger the value, the smaller the false accept rate and the larger the false rejection rate

10.3.15 Set Face Mask Parameters

After enabling the face without mask detection, the system will recognize the face with mask or not.

Steps

1. Tap → **Smart** → **Face Mask Detection Parameters** to enter the configuration page.

   Note

   The functions vary according to different models. Refers to the actual device for details.

2. After enabling the face with mask detection, the system will recognize the face with mask or not.

   Terminal

   Select **Entrance** or **Exit** as the terminal direction.

   Face with Mask Detection

   Enable the function and the device will detect the person whether wearing a face mask or not.

   Face with Mask & Face (1:1)

   Set the matching value when authenticating with face mask via 1:1 matching mode. The larger the value, the smaller the false accept rate and the larger the false rejection rate.

   Face with Mask 1:N Matching Threshold

   Set the matching threshold when authenticating with face mask via 1:N matching mode. The larger the value, the smaller the false accept rate and the larger the false rejection rate.

   Face withouth Mask Strategy

   Select a strategy when detect person not wearing a face mask.

   None

The function is disabled. The device will not detect whether a person is wearing a face mask or not.

Reminder of Wearing Face Mask

If the person do not wear the face mask when authenticating, the device will pop up a prompt and the door will open.

Must Wear Face Mask

If the person do not wear the face mask when authenticating, the device will pop up a prompt and the door will keep closed.

3. Click **Save**.

10.3.16 IR Detector Settings

Set the IR detector parameters.

Steps

1. Tap → **IR Detector Settings** to enter the configuration page.
2. Set **Inductive Mode (Entrance)** and **Inductive Mode (Exit)**.
3. You can customize IR detector.

Exceptional IR Auto Shield

If the IR detector is damaged, the IR detector can be shielded to temporarily restore the lane to use, but it may cause injury to passers-by when the barrier is open and closed.

Note

Exceptional IR auto shield function is a short-term shield. If there is no exception for 1 hour, it will restore.

IR Emergency Mode

If some IR beams do not work properly, you can shield those IR beams to restore the lane. But this action may hit person and cause injury.

Enable Custom Anti-pinch for Door Closing

Anti-pinch for door closing is used when the device detects that there are still people staying in the lane when the barrier closes, the barrier will not close. The barrier will close only when the person has completely exited the lane. When you enable the function, you can shield some IR detectors, so that the barrier can be closed in advance after people pass, but it may injure passers-by when the barrier is open and closed.

It is recommended to enable the function.

4. Tap **Save**.

10.3.17 People Counting Settings

Set people counting.

Steps

1. Tap → **People Counting Settings** to enter the configuration page.
2. Enable **People Counting**, and the devcie will count passing person's number.
3. Enable **Device Offline People Counting**, and the device will count people numbers even if it is offline.
4. Enable **Passing Event Record**, and the device will upload each person's passing event.
5. Set **Person Statistics Type**.

   Invalid

   Disable people counting.

   Passing Detection

   The number of all passing people.

   Authentication Number

   The number of passing people verified through card swiping, face recognition, etc.
6. Set **Passing Direction** and you can set the passing direction of the device.
7. Tap **Clear** to clear all people counting information.
8. Tap **Save**.

10.3.18 Passing and Authentication Indicator Settings

Set the passing and authentication indicator's light brightness.

Tap → **Light** → **Passing and Auth. Indicator** to enter the configuration page.

Set **Light Brightness** as **Auto** or **Manual**. If select **Manual**, you should move the block to adjust the brightness.

10.3.19 Other Settings

Tap → **Other Settings** to enter the configuration page.

Set the parameters and tap **Save**.

Alarm Output 1 Duration/Alarm Output 2 Duration

Set the alarm output device's output duration. The alarm output duration ranges from 0 s to 3599 s. 0 means continuous output.

Temperature Unit

Select the temperature unit.

Do Not Open Barrier When Lane is Not Clear

When enabled, the barrier will not open when people is authenticated in the lane.

Light Board Brighness

Drag the block or enter the value to adjust the brightness. The larger the value, the brighter the light becomes.

Barrier Closing Delay

After a person passes through the lane, the barrier will close after the set time period.

Intrusion Duration

If a person mistakenly enters the lane for more than the set time, or if the person passes longer than the set time, the device will start alarming.

Overstaying Duration

If someone or something is detected to be stuck in the lane for more than the set time, the device will start alarming.

IR Obstructed Duration

If the infrared target is obstructed for more than the set time, the device will start alarming. 0 indicates that the function is not enabled.

Memory Mode

Multiple cards presenting for multiple person passing is allowable when enabling the memory mode. When the passing person's number exceeds the card presenting number, or after the latest person passing with no other person passing within the door open duration, the door will close automatically.

Control Mode

Soft Mode

The barrier will be closed after the person has passed through the barrier when there are tailgating, forced accessing, etc.

Guard Mode

The barrier will be closed immediately when there are tailgating, forced accessing, etc.

Fire Input Type

In the normally open state, closing triggers fire protection. In the normally closed state, disconnection triggers fire protection.

Barrier Open Angle

Tap **Barrier Open Angle** and set the angle. The barrier can open the configured angle.

Note

- You can set the angle between 85° and 91°. 0.1° is the minimum adjust unit.

10.3.20 Upgrade and Maintenance

Restart device, restore device parameters, and upgrade device version.

Restart Device

Tap → **Restart** .
Tap **Restart** to restart the device.

Upgrade

Tap → **Upgrade** .
Tap **Upgrade** to upgrade the device.

Note

Do not power off during the upgrading.

Restore Parameters

Tap → **Default** .

Restore to Default Settings

Tap **Restore to Default Settings**, enter the admin password and click **OK**. The device will restore to the default settings, except for the device IP address and the user information.

Restore to Factory Settings

Tap **Restore to Factory Settings**, enter the admin password and click **OK**. All parameters will be restored to the factory settings. You should activate the device before usage.

Log Export

Tap → **Log Export** .
Select the log type, and tap **Export** to download the maintenance log.

10.3.21 Device Debugging

You can finish studying and self-test, and mange the debugging.

Tap → **Device Debugging** to enter the configuration page.

Lane Studying/Motor Self-Test

Lane Studying

Tap **Lane Studying**, and the device will enter the studying mode. It will study the closed position of the barrier.

Motor Self-Test

Tap **Motor Self-Test**, and the device motor will start self-test..

Encoder Self-Test

Select a channel (lane), and tap **Encoder Self-Test**, the select lane will start self-test.

IR Self-Test

After enabling IR self-test function, the device will sound to exit the channel (lane) before opening/closing. The barrier is forced to open in entrace/exit at the highest speed, at this time IR anti-pinch is defunct. If IR is triggered or blocked, the device will sound detection failure.

Select a channel (lane) and tap **IR Self-Test**, the device will test all IR detectors.

Note

Make sure there are no person in the lane.

Debugging Command Management

Select a command type and select the command or tap the command manually. Tap **Send**. The command will send to the device.

When the command is complete, you can see the result in the page.

Tap **End Debugging** to finish the debugging.

Note

If you do not tap **End Debugging**, the device will end the debugging mode within 7×24 hours automatically.

IR Exception Info.

Tap **Export** to export the exceptional IR detectors reports.

10.3.22 View User Document

View the user document.

Note

Only when you enter the mobile web by IP address, can you view the user document. Login by hot spot does not support the function.

Tap ≡ to enter the page.

Tap **View Online Document** to view the user manual.

10.3.23 View Open Source Software License on Mobile Web

Tap ≡ → **Open Source Software Licenses** to view the device license.

10.3.24 Log Out

Log out the configuration page.

Tap → **Logout** , tap **OK**.

If you need to enter the configuration page, you need to enter the user name and password again.

Chapter 11 Operation via PC Web

11.1 Login

You can login via the web browser or the remote configuration of the client software.

Note

Make sure the device is activated.

Enter the device IP address in the address bar of the web browser and press **Enter** to enter the login page.

Note

Make sure that the IP address starts with ***Http:***.

Enter the device user name and the password. Click **Login**.

Note

5 failed password enterings will lock the device. You should try again after 30 min.

11.2 Forget Password

If you forget the password when logging in, you can change the password by email address or security questions.

On the login page, click **Forget Password**.

Select **Verification Mode**.

Security Question Verification

Answer the security questions.

E-mail Verification

1. Export the QR code and send it to ***pw_recovery@hikvision.com*** as attachment.
2. You will receive a verification code within 5 minutes in your reserved email.
3. Enter the verification code into the verification code field to verify your identification.

Click **Next**, create a new password and confirm it.

11.3 Quick Operation via Web Browser

11.3.1 Time Settings

Click in the top right of the web page to enter the wizard page.

Time Zone

Select the device located time zone from the drop-down list.

Time Sync.

NTP

You should set the NTP server's IP address, port No., and interval.

Manual

By default, the device time should be synchronized manually. You can set the device time manually or check **Sync. with Computer Time** to synchronize the device time with the computer's time.

Server Address/NTP Port/Interval

You can set the server address, NTP port, and interval.

DST

You can view the DST start time, end time and bias time.

Click **Next** to save the settings and go to the next parameter. Or click **Skip** to skip time settings.

11.4 Person Management

Click **Add** to add the person's information, including the basic information, certificate and authentication settings.

Add Basic Information

Click **Person Management → Add** to enter the Add Person page.
Add the person's basic information, including the employee ID, the person's name, and person type.
If you select **Visitor** as the person type, you can set the visit times.
Click **Save** to save the settings.

Set Permission Time

Click **Person Management → Add** to enter the Add Person page.
Enable **Long-Term Effective User**, or set **Validity Period** and the person can only has the permission within the configured time period according to your actual needs.
Click **Save** to save the settings.

Add Face Picture

Click **Person Management → Add** to enter the Add Person page.
Click **+** on the right to upload a face picture from the local PC.

Note

The picture format should be JPG or JPEG or PNG, and the size should be less than 200 K.

Click **Save** to save the settings.

Add Card

Click **Person Management → Add** to enter the Add Person page.
Click **Add Card**, enter the **Card No.** and select the **Property**, and click **OK** to add the card.

Note

Up to 50 cards can be added.

Click **Save** to save the settings.

Authentication Settings

Click **Person Management → Add** to enter the Add Person page.
Set **Authentication Type** as **Same as Device** or **Custom**.
Click **Save** to save the settings.

Import/Export Person Data

Export Person Data

You can export added person data for back-up or importing to other devices.

Click **Export Person Data**, set an encryption password and confirm it. Click **OK**.

Note

- The person data will be downloaded to your PC.
- The password you set will be required for importing the data file.

Importing Person Data

Click **Importing Person Data** and select the file. Click **Import**.

Enter the encryption password to import and synchronize the person data to devices.

11.5 Device Management

11.5.1 Device Management

You can manage the linked device on the page.

Steps

1. Click **Device Management → Device Management → Sub Access Control Board** to enter page.

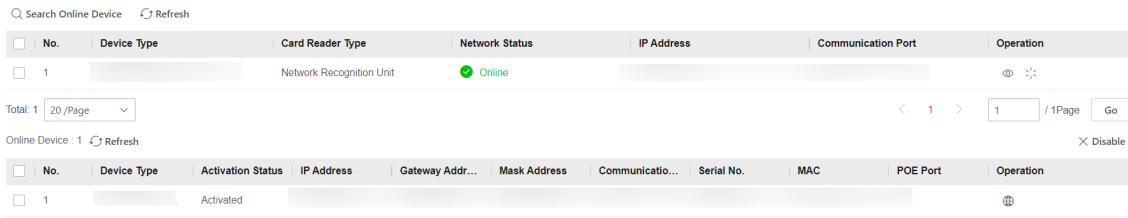

Figure 11-1 Device Management

2. Click to set **Device Name** and view the **Device Model**, **Serial No.**, **Version**, **Version**, **Alarm Inputs** and **Alarm Outputs**, and then click **Save**.
3. Click to reboot.
4. Click **Refresh** to get the device information.
5. Click to edit network parameters of the sub access control board, such as **IP address** and view the **Gateway Address**, **IPv4 Subnet Mask**, and **Communication Port**, enter the admin password and then click **Save**.

11.5.2 Batch Devices Management

You can view the information of all the main access control boards, which are under the same network segment with the current device. You can locate the barrier, set the network parameters, synchronize parameter with sub access control board and edit the device name of single main access control board. You can also select batch devices to set network parameters, sync parameters and activate.

Steps

1. Click **Device Management → Device Management → Batch Manage Devices** to enter page.

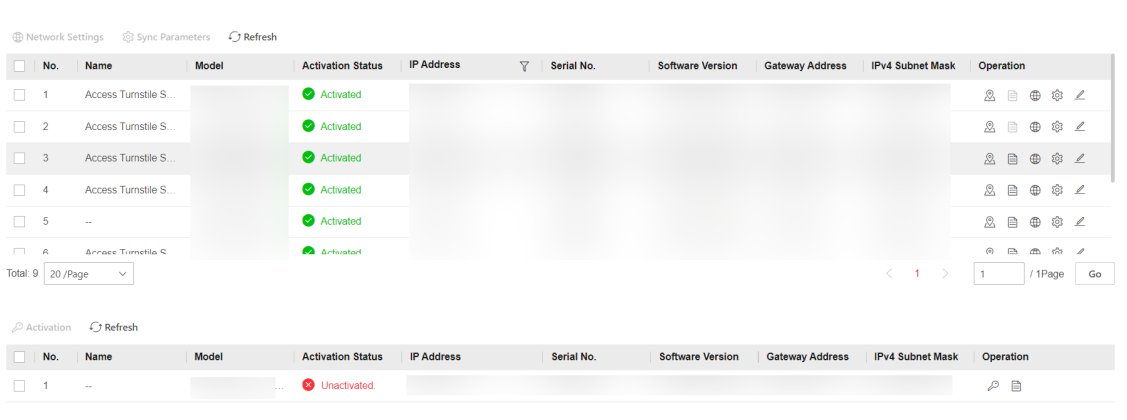

Figure 11-2 Batch Manage Devices Page

All the devices (main access control board), which are under the same network with the sub access control board, will be displayed in the page.

Note

The upper area of the page is the activated devices; and the bottom area is non-activated devices.

2. You can operate the following actions to the activated devices.

Click the icon to locate the barrier via the barrier's status.

Click the icon to view the information of sub access control board and set the network parameters, enter the admin password and click **Save**.

Note

- If uncheck the DHCP function, you should set the IPv4 address, IPv4 subnet mask, and gateway address.
- If you check the DHCP function, the system will allocate the IPv4 address, IPv4 subnet mask, and gateway address automatically.

Click the icon to set the network parameters of main and sub access control boards, enter the admin password and click **Save**.

DHCP

If uncheck the function, you should set the IPv4 address, IPv4 subnet mask, and IPv4 default gateway.

If uncheck the function, you should set the IPv4 address, IPv4 subnet mask, and IPv4 default gateway.

IPv6 Mode

Manual

Set the IPv6 address, IPv6 subnet prefix length and IPv6 default gateway manually.

DHCP

The system will allocate the IPv6 address, IPv6 subnet prefix length and IPv6 default gateway automatically.

Route Advertisement

A mechanism for automatic address configuration in the IPv6 protocol stack. The device can complete IPv6 address configuration as long as there are routers in the environment that can provide routing notification messages.

Click **View Route Advertisement** to view the IPv6 address list.

Click the icon to sync the corresponding parameters with the current device's, enter the admin password and click **Save**.

Click the icon to edit the name of the device, enter the admin password and click **Save**.

3. You can operate the following actions to the non-activated devices.

Click the icon to set the network parameters of main and sub access control boards, enter the admin password and click **Save**.

4. You can manage the batch devices as follows:

Select the devices and click the icon to set the network parameters of main access control boards, and enter the admin password and click **Save**.

Note

The system will allocate IP addresses to the selected devices in turns. The sub access board's IP will be main access board's IP+1.

Select the devices and click the icon to sync the corresponding parameters of with the current device, and enter the admin password and click **Save**.

Select the devices and click the icon to activate, and enter the admin password and click **Save**.

11.6 Turnstile

11.6.1 Overview

You can view the device component status, real-time event, person information, network status, basic information, and device capacity. You can also control the barrier remotely.

Function Descriptions:

Device Component Status

You can check if the device is working properly. Click **View More** to view the detailed component status.

Remote Control

/ / /

The door is opened/closed/remaining open/remaining closed.

Real-Time Event

You can view the event Employee ID, Name, Card No., Event Type, Time, and Operation. You can also click **View More** to enter the search conditions, including the event type, employee ID, the

name, the card No., the start time, and the end time, and click **Search**. The results will be displayed on the right panel.

Person Information

You can view the added and not added information of person, face, and card.

Network Status

You can view the network connection status.

Basic Information

You can view the model, serial No. and firmware version.

Device Capacity

You can view the person, face, card, event capacity.

11.6.2 Search Event

Click **Event Search** to enter the Search page.

Select event types, major type and sub type. Enter the search conditions, including the employee ID, the name, the card No., the start time, and the end time, and click **Search**.

The results will be displayed on the right panel.

11.6.3 Paramenter Settings

Set Door Parameters

Click **Turnstile → Parameter Settings → Door Parameters** .

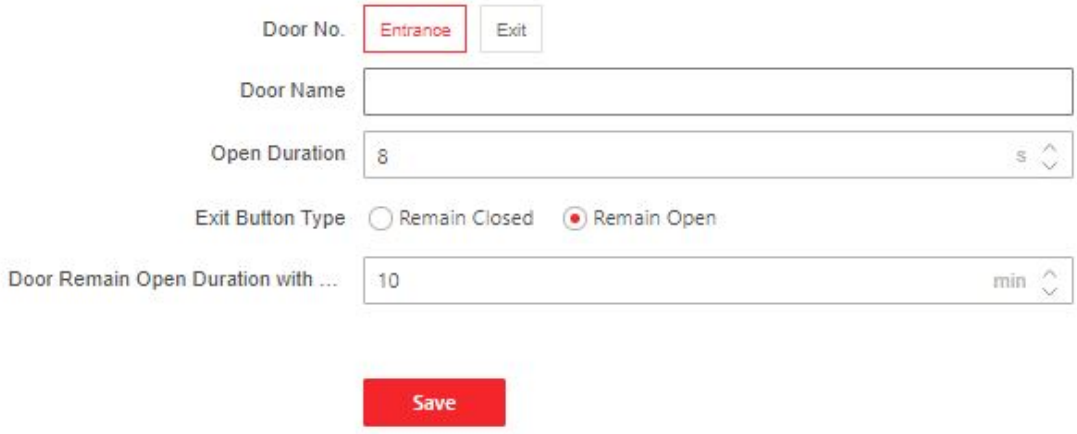

Figure 11-3 Door Parameters Settings Page

Click **Save** to save the settings after the configuration.

Door No.

Select **Entrance** or **Exit** for settings.

Door Name

You can create a name for the door.

Open Duration

Set the door unlocking duration. If the door is not opened for the set time, the door will be locked.

Note

The open duration ranges from 5 s to 60 s.

Exit Button Type

You can set the exit button as **Remain Open** or **Remain Closed** according to your actual needs. By default, it is **Remain Open**.

Door Remain Open Duration with First Person

Set the door open duration when first person is in. After the first person is authorized, it allows multiple persons access the door or other authentication actions.

Note

The duration ranges from 1 s to 1440 s.

Set Authentication Parameters

Click **Turnstile → Parameter Settings → Authentication Settings** .

Note

The functions vary according to different models. Refers to the actual device for details.

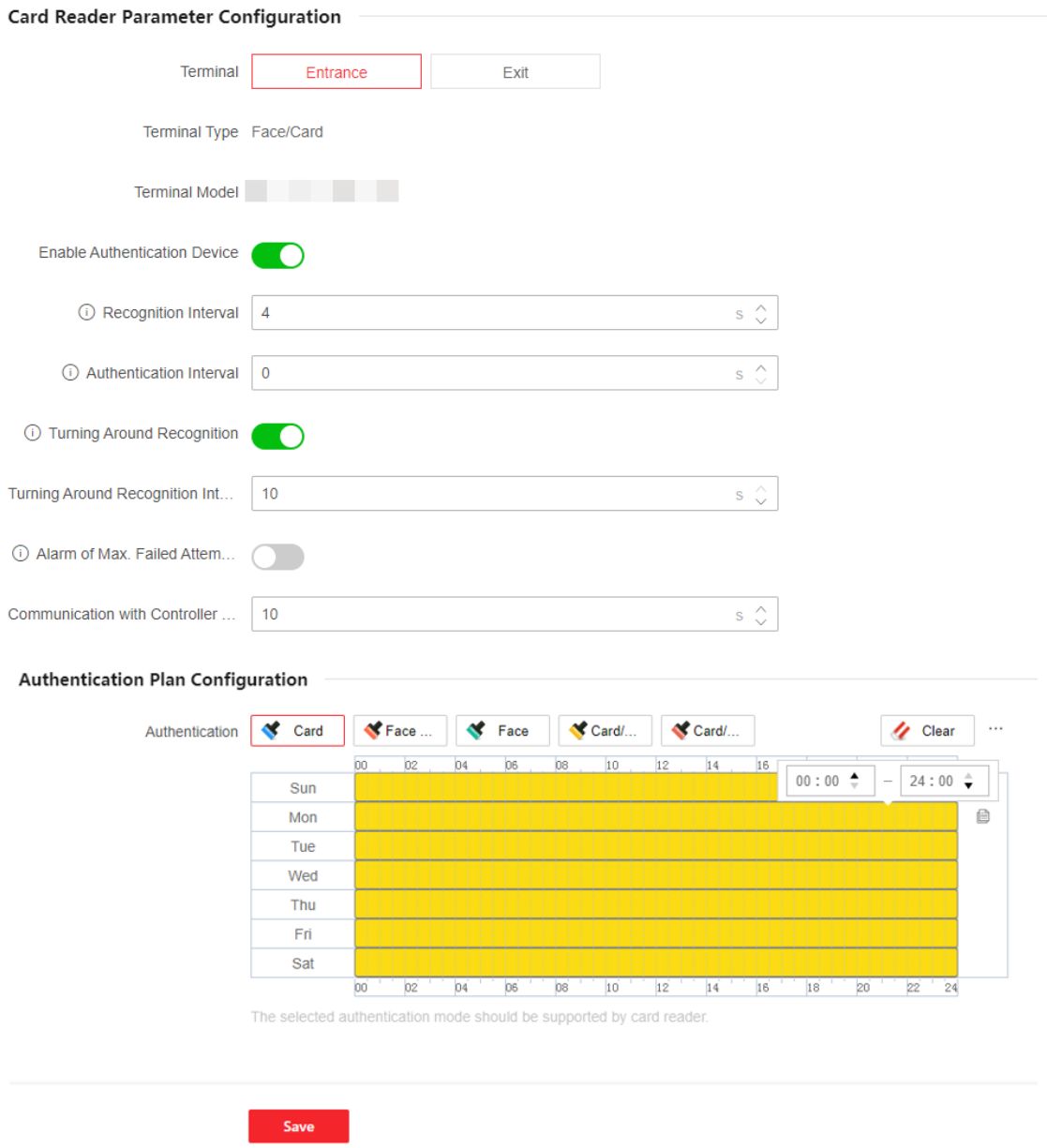

Figure 11-4 Set Authentication Parameters

Click **Save** to save the settings after the configuration.

Terminal/Terminal Type/Terminal Model

Get terminal description. They are read-only.

Enable Authentication Device

Enable the authentication function.

Recognition Interval

You can set the interval between 2 continuous recognition of a same person during the authentication. In the configured interval, Person A can only recognized once. If another person (Person B) has recognized during the interval, Person A can recognized again.

Authentication Interval

You can set the authentication interval of the same person when authenticating. The same person can only authenticate once in the configured interval. A second authentication will be failed.

Turning Around Recognition

When enable the function, after authentication from one side, the device will not authenticate the passing person from the other side within the configured interval.

Alarm of Max. Failed Attempts

Enable to report alarm when the card reading attempts reach the set value.

Max. Authentication Failed Attempts

Enable to report alarm when the card reading attempts reach the set value.

Communication with Controller Every

When the access control device cannot connect with the card reader for longer than the set time, the card reader will turn offline automatically.

Note

The authentication interval value ranges from 2 s to 255 s.

Set Biometric Parameters

Set Basic Parameters

Click **Turnstile → Parameter Settings → Smart** .

Note

The functions vary according to different models. Refers to the actual device for details.

Click **Save** to save the settings after the configuration.

Terminal

Select a direction.

Face Recognition

After enabling, the device will support face recognition.

Face Anti-Spoofing

Enable or disable the live face detection function. If enabling the function, the device can recognize whether the person is a live one or not.

Note

Biometric recognition products are not absolutely applicable to anti-spoofing environments. If you require a higher security level, use multiple authentication modes.

Anti-Spoofing Detection Level

After enabling the face anti-spoofing function, you can set the matching security level when performing live face authentication.

Recognition Distance

Select the distance between the authenticating user and the device camera.

Application Mode

Select either other or indoor according to actual environment.

Pitch Angle

The maximum pitch angle when starting face authentication.

Yaw Angle

The maximum yaw angle when starting face authentication.

1:1 Matching Threshold

Set the matching threshold when authenticating via 1:1 matching mode. The larger the value, the smaller the false accept rate and the larger the false rejection rate.

1:N Matching Threshold

Set the matching threshold when authenticating via 1:N matching mode. The larger the value, the smaller the false accept rate and the larger the false rejection rate.

Face Recognition Timeout Value

Set the timeout value when face recognizing. If the face recognition time is longer than the configured value, the system will pop up a prompt.

Face Recognition Area

Select **Entrance** or **Exit** as the terminal direction.

Drag the block or enter the parameters to set the face recognition area.

Click **Save**.

ECO Mode

After enabling the ECO mode, the device will use the IR camera to authenticate faces in the low light or dark environment. And you can set the ECO mode threshold, ECO mode (1:N), and ECO mode (1:1).

Enable Mode

You can set **Auto** or **Timing** to enable the ECO mode.

When you select **Timing**, you should click **Set** to set the time duration that the device will enable ECO mode. Click **Save**.

ECO Mode Threshold

The larger the value, the device enter the ECO Mode easier.

ECO Mode (1:1) Threshold

Set the matching threshold when authenticating via ECO mode 1:1 matching mode. The larger the value, the smaller the false accept rate and the larger the false rejection rate.

ECO Mode (1:N) Threshold

Set the matching threshold when authenticating via ECO mode 1:N matching mode. The larger the value, the smaller the false accept rate and the larger the false rejection rate

Face with Mask Detection

After enabling the face without mask detection, the system will recognize the captured face with mask picture or not. You can set face with mask1:N matching threshold, it's ECO mode, and the strategy.

None

The function is disabled. The device will not detect whether a person is wearing a face mask or not.

Reminder of Wearing Face Mask

If the person do not wear the face mask when authenticating, the device will pop up a prompt and the door will open.

Must Wear Face Mask

If the person do not wear the face mask when authenticating, the device will pop up a prompt and the door will keep closed.

Face with Mask & Face (1:1)

Set the matching value when authenticating with face mask via 1:1 matching mode. The larger the value, the smaller the false accept rate and the larger the false rejection rate.

Face with Mask 1:N Matching Threshold

Set the matching threshold when authenticating with face mask via 1:N matching mode. The larger the value, the smaller the false accept rate and the larger the false rejection rate.

Face with Mask & Face 1:1 Matching Threshold (ECO)

Set the matching value when authenticating with face mask via ECO mode 1:1 matching mode. The larger the value, the smaller the false accept rate and the larger the false rejection rate.

Face with Mask & Face 1:N Matching Threshold (ECO)

Set the matching threshold when authenticating with face mask via ECO mode 1:N matching mode. The larger the value, the smaller the false accept rate and the larger the false rejection rate.

Card Settings

Set Card Type

Click **Turnstile → Parameter Settings → Card Settings** to enter the settings page.

Set the parameters and click **Save**.

Enable NFC Card

In order to prevent the mobile phone from getting the data of the access control, you can disable NFC card to increase the security level of the data.

Enable M1 Card

Enable M1 card and authenticating by presenting M1 card is available.

M1 Card Encryption

Sector

M1 card encryption can improve the security level of authentication.

Enable the function and set the encryption sector. By default, Sector 13 is encrypted. It is recommended to encrypt sector 13.

Enable EM Card

Enable EM card and authenticating by presenting EM card is available.

Note

If the peripheral card reader supports presenting EM card, the function is also supported to enable/disable the EM card function.

Enable DESFire Card

The device can read the data from DESFire card when enabling the DESFire card function.

DESFire Card Read Content

After enable the DESFire card content reading function, the device can read the DESFire card content.

Enable FeliCa Card

The device can read the data from FeliCa card when enabling the FeliCa card function.

Set Card No. Authentication Parameters

Set the card reading content when authenticate via card on the device.

Go to **Turnstile → Parameter Settings → Card Settings** .

Select a card authentication mode and click **Save**.

Card Authentication Mode

Full Card No.

All card No. will be read.

Wiegand 26 (3 bytes)

The device will read card via Wiegand 26 protocol (read 3 bytes).

Wiegand 34 (4 bytes)

The device will read card via Wiegand 34 protocol (read 4 bytes).

Corporate1000_35/Corporate1000_48/H10302_37/10304_37/H103130_332CSN/Wiegand_56CSN/Wiegand_58

The device will read card via the other mode.

Enable Reversed Card No.

The read card No. will be in reverse sequence after enabling the function.

Event Linkage

Set linked actions for events.

Steps

1. Click **Turnstile → Parameter Settings → Linkage Settings** to enter the settings page.

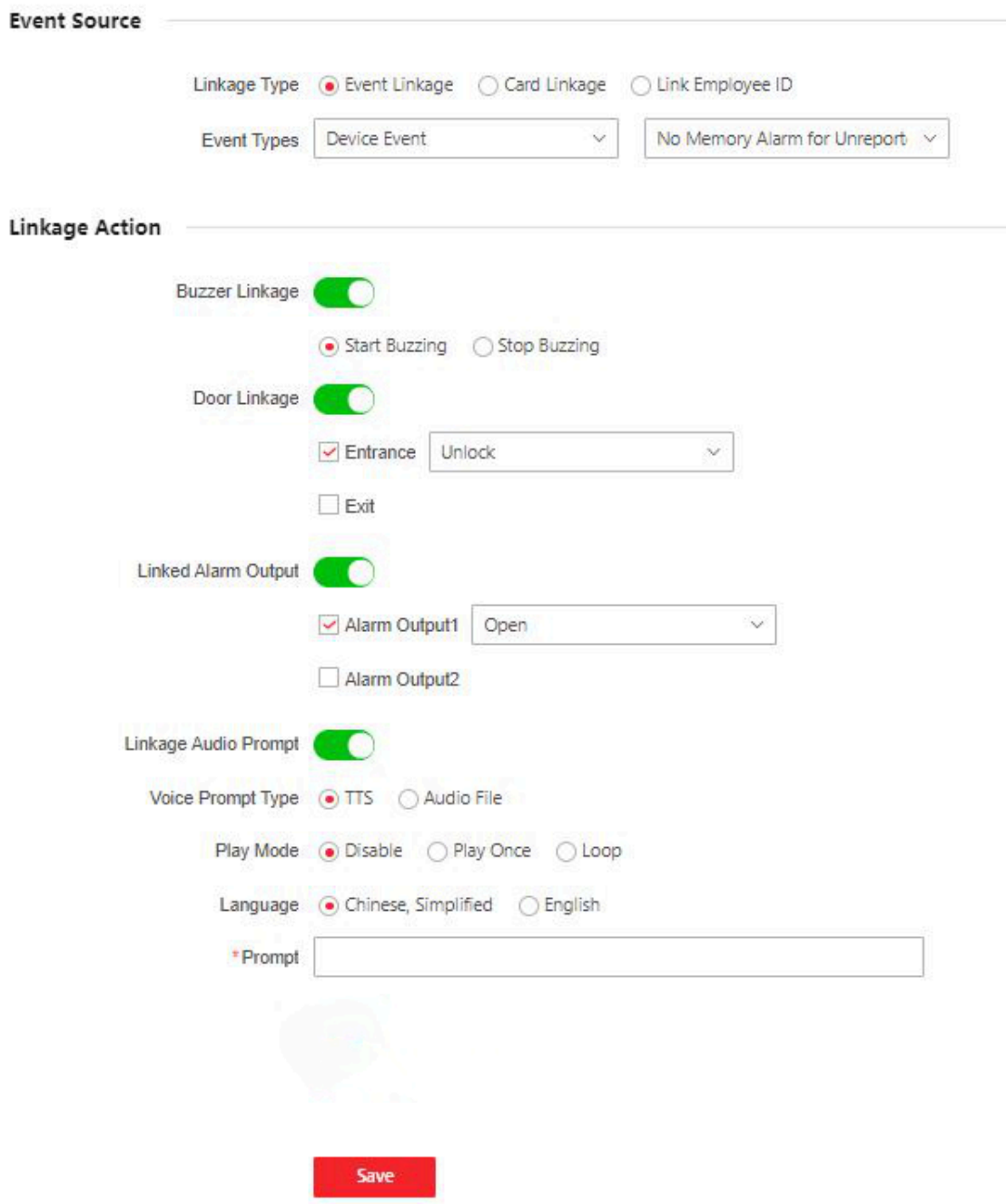

Figure 11-5 Event Linkage

2. Click **+** to set event source.

- If you choose **Linkage Type** as **Event Linkage**, you need to select event types from the drop-down list.
- If you choose **Linkage Type** as **Card Linkage**, you need to enter the card No. and select the card reader.

- If you choose **Linkage Type** as **Employee ID Linkage**, you need to enter the employee ID and select the card reader.

3. Set linkage action.

Door Linkage

Enable **Door Linkage**, and set the door status **Entrace**and **Exit** for the target event.

Linked Alarm Output

Enable **Linked Alarm Output**, check **Alarm Output 1** or **Alarm Output 2**, and set the alarm output status for the target event.

Linked Audio Prompt

Enable **Linked Audio Prompt** and select the play mode.

- If you choose **TTS**, you need to set language and enter the prompt content.
- If you choose **Audio File**, you need to select an available audio file from the drop-down list or click **General Linkage Settings** to add a new audio file.

Linked Capture

Enable **Linked Capture** and select entrance or exit to capture for the target event.

Set Terminal Parameters

You can set terminal parameters for accessing.

Click **Configuration → Access Control → Terminal Parameters** .

You can set **Working Mode** as **Permission Free Mode** or **Access Control Mode**.

Permission Free Mode

The device only judge your credential is in the valid duration, and will not authenticate the permission.

Enable **Verify Credential Locally**, the device will check permission but not estimate the plan template.

Access Control Mode

The access control mode is the device normal mode. You should authenticate your credential for accessing.

You can enable **Remote Verification** according to your actual needs. After enabling, you can verify remotely. And you can enable **Verify Credential Locally** according to your actual needs.

Click **Save** to save the settings after the configuration.

Set Privacy Parameters

Set the event storage type, picture upload and storage parameters, and the picture clearing parameters.

Go to **Turnstile → Parameter Settings → Privacy Settings**

Event Storage Settings

The event storage type is overwriting by default. The earliest 5% events will be deleted when the system detects the stored events has been over 95% of the full space.

Picture Uploading and Storage

Save Picture When Auth.

If you enable this function, you can save the picture when authenticating to the device.

Upload Picture When Auth.

Upload the pictures captured when authenticating to the platform automatically.

Save Registered Picture

The registered face picture will be saved to the system if you enable the function.

Save Pictures After Linked Capture

If you enable this function, you can save the picture captured by linked camera to the device.

Upload Picture After Linked Capture

Upload the pictures captured by linked camera to the platform automatically.

Clear All Pictures in Device

Note

All pictures cannot be restored once they are deleted.

Clear Registered Face Pictures

All registered pictures in the device will be deleted.

Clear Captured Pictures

All captured pictures in the device will be deleted.

11.6.4 Turnstile Configuration

Basic Parameters

Set turnstile basic parameters.

Steps

1. Click **Turnstile → Turnstile Configuration → Basic Parameters** to enter the page.

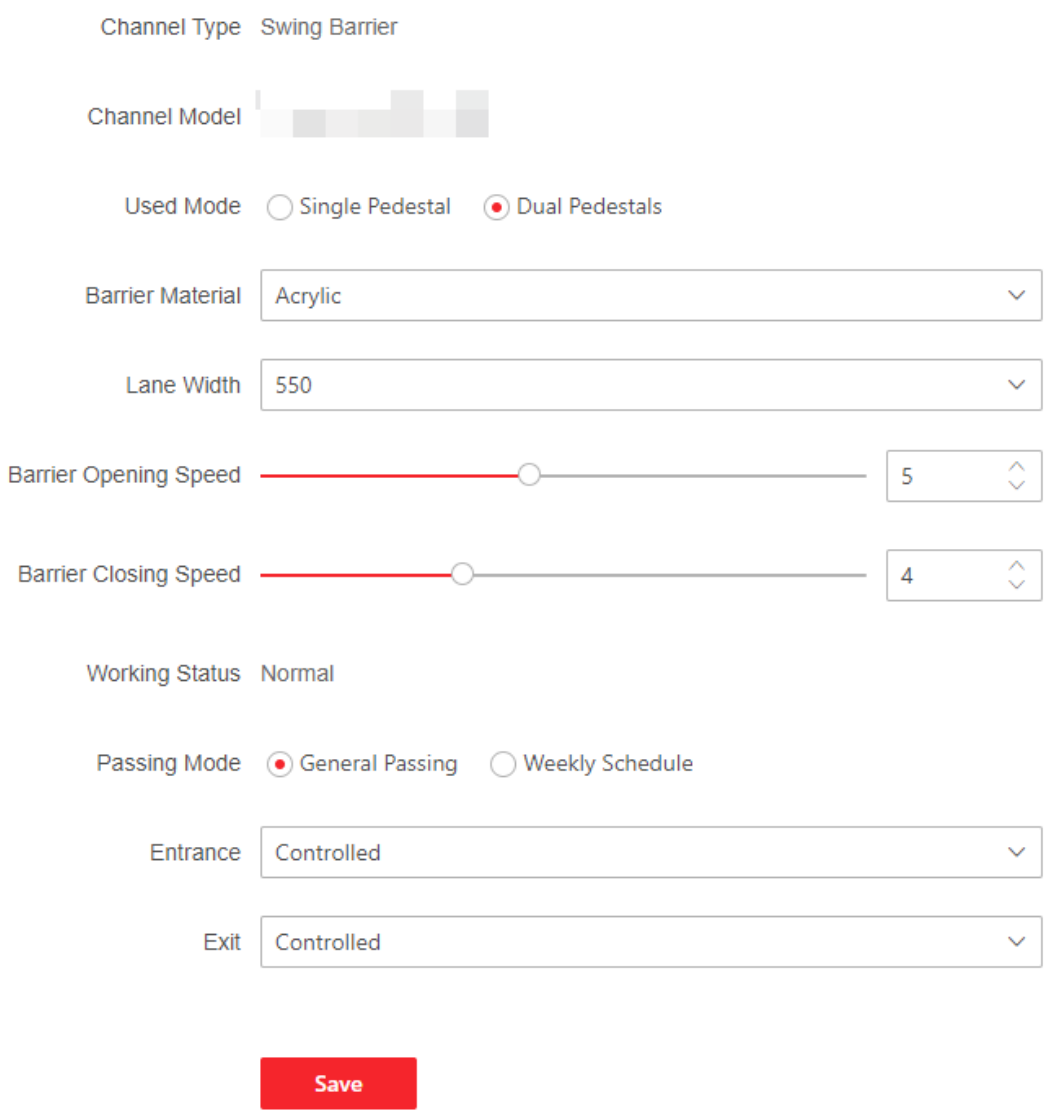

Figure 11-6 Basic Parameters

2. View the **Channel Type**, **Channel Model**, and **Working Status**.
3. Set **Used Mode**, **Barrier Material**, **Lane Width**, **Barrier Opening Speed** and **Barrier Closing Speed**.

Used Mode

Select **Single Pedestal** or **Dual Pedestals** according to actual needs.

Single Pedestal

When you only use one pedestal, you should select this option.

Dual Pedestals

When you only use dual pedestals, you should select this option.

Note

Determine whether the product supports this function according to the specific model.

Barrier Material

Select a barrier material according to actual situation.

Lane Width

Select a lane width according to actual situation.

Barrier Opening Speed/Barrier Closing Speed

Set the barrier opening or closing speed.

4. Set the passing mode.
   - If you choose **General Passing**, you can select the barrier status for the entrance and exit from the drop-down list.
   - If you choose **Weekly Schedule**, you can set a weekly schedule for entrance and exit barriers.
5. Set **Entrance** and **Exit** status.
6. Click **Save**.

Keyfob Settings

Set keyfob parameters.

Steps

1. Click **Turnstile → Turnstile Configuration → Keyfob Configuration** to enter the page.

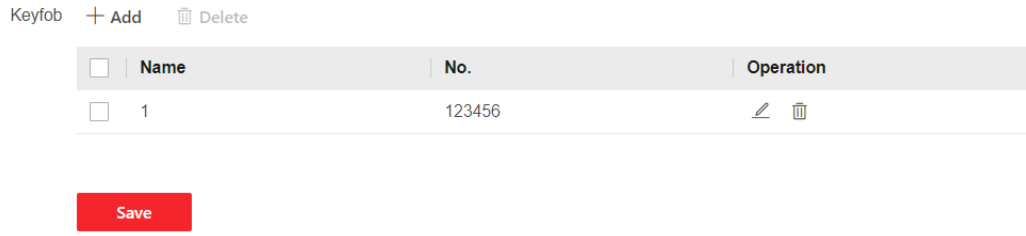

Figure 11-7 Keyfob Settings

2. Add keyfob.
   1) Click **Add** and the keyfob adding window will pop up.
   2) Enter the **Name** and **Serial No.**.
   3) Click **Add** to add the keyfob.
3. **Optional:** Select a keyfob and click **Delete** to delete the keyfob.
4. Click **Save**.

IR Detector

Set IR detector.

Steps

1. Click **Configuration → Turnstile → IR Detector** to enter the page.

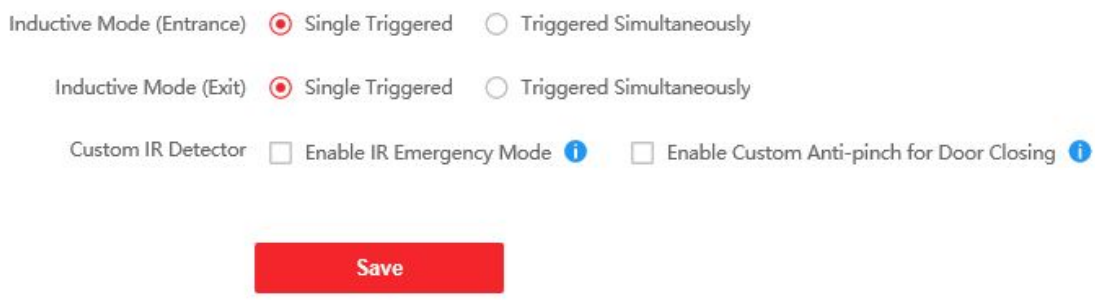

Figure 11-8 IR Detector

2. Set the entrance and exit inductive mode as **Single Triggered** or **Triggered Simultaneously**.
3. Enable **Exceptional IR Auto Shield**. If the IR detector is damaged, the IR detector can be shielded to temporarily restore the lane to use, but it may cause injury to passers-by when the barrier is open and closed.

Note

Exceptional IR auto shield function is a short-term shield. If there is no exception for 1 hour, it will restore.

4. Set custom IR detector mode.

   Enable IR Emergency Mode

   If some IR beams do not work properly, you can shield those IR beams to restore the lane. But this action may hit person and cause injury.

   Enable Custom Anti-pinch for Door Closing

   Anti-pinch for door closing refers that the barrier will not close if the device has detected person in the lane. Only after the person walks out of the lane, the barrier will close. If you enable the function, you can shield parts of the IR beams for closing barrier in advance. But this action may hit person and cause injury.
5. Click **Save**.

People Counting

Set people counting.

Steps

1. Click **Turnstile → Turnstile Configuration → People Counting Settings** to enter the page.

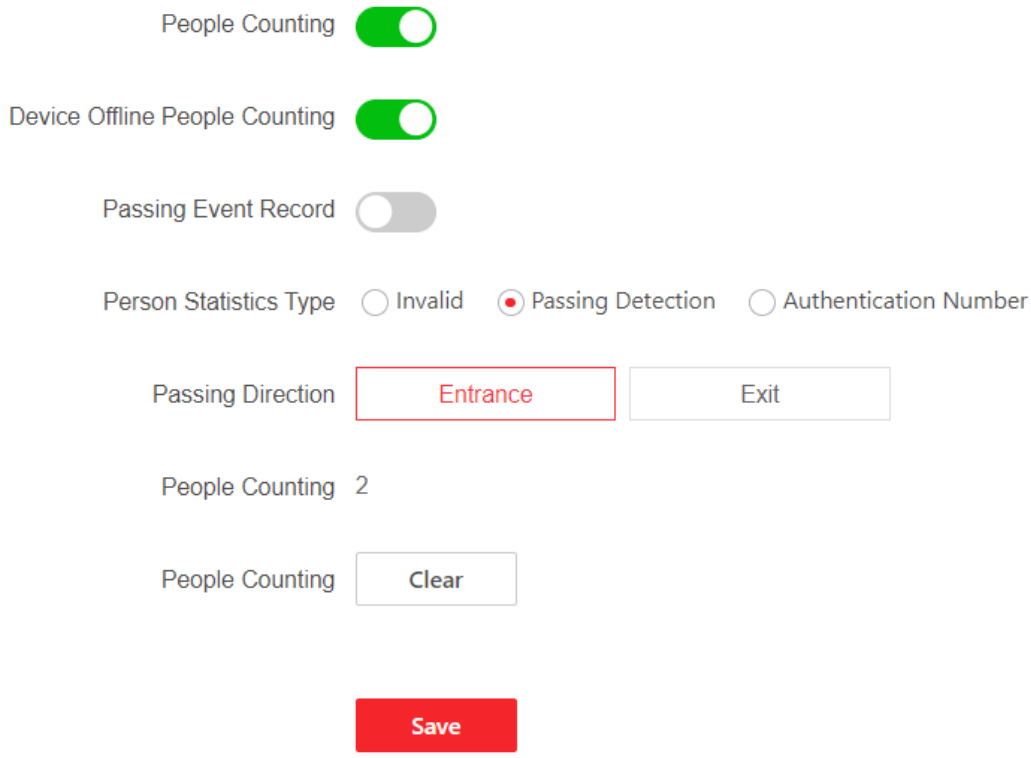

Figure 11-9 People Counting

2. Set people counting parameters and click **Save**.

People Counting

Enable the function and set the parameters.

Device Offline People Counting

The device will count people numbers even if it is offline.

Passing Event Record

The device will report passing event to the platform when people passing.

People Statistics Type

Invalid

Disable people counting.

Passing Detection

The number of all passing people.

Authentication Number

The number of passing people verified through card swiping, etc.

Passing Direction

Select the device passing direction according to actual needs.

People Counting

View the people counting number and you can also click **Clear** to clear all data.

Set Light

Set the light brightness when authentication of the device.

Steps

1. Click **Turnstile → Turnstile Configuration → Light Settings** to enter the page.

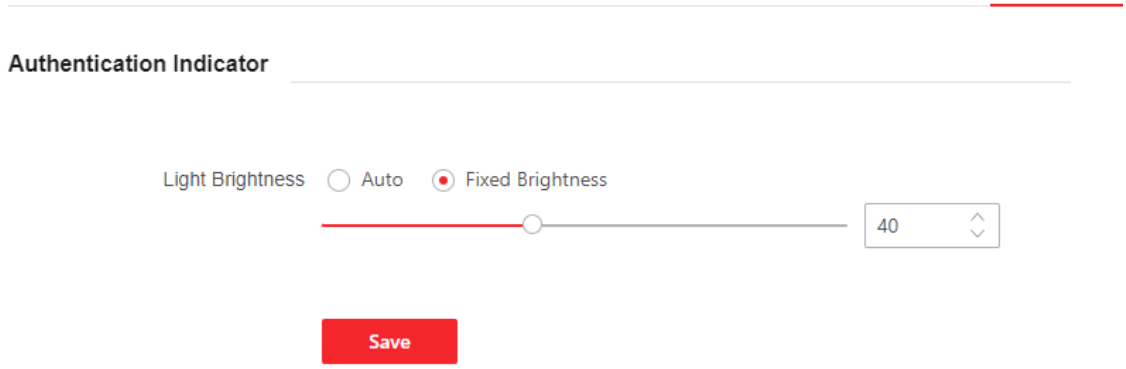

Figure 11-10 Light Settings

2. Set **Light Brightness** as **Auto** or **Fixed Brightness**. If you choose **Fixed Brightness**, you can drag the block or enter the value to adjust the light brightness manually.
3. Click **Save**.

Other Settings

Set other parameters.

Steps

1. Click **Turnstile → Turnstile Configuration → Other Settings** to enter the page.
2. Set parameters.

   Alarm Output Duration

The alarm output duration ranges from 0 s to 3599 s. 0 indicates continuous output.

Temperature Unit

Select unit.

Do Not Open Barrier When Lane is Not Clear

When enabled, the barrier will not open when people is authenticated in the lane.

Light Board Brightness

Drag the block or enter the value to adjust the brightness. The larger the value, the brighter the light becomes.

Barrier Closing Delay

After a person passes through the lane, the barrier will close after the set time period.

Intrusion Duration

If a person mistakenly enters the lane for more than the set time, or if the person passes longer than the set time, the device will start alarming.

Overstaying Duration

If someone or something is detected to be stuck in the lane for more than the set time, the device will start alarming.

IR Obstructed Duration

If the infrared target is obstructed for more than the set time, the device will start alarming. 0 indicates that the function is not enabled.

Memory Mode

Multiple cards presenting for multiple person passing is allowable when enabling the memory mode. When the passing person's number exceeds the card presenting number, or after the latest person passing with no other person passing within the door open duration, the door will close automatically.

Control Mode

Soft Mode: The barrier will be closed after the person has passed through the barrier when there are tailgating, forced accessing, etc.

Guard Mode:The barrier will be closed immediately when there are tailgating, forced accessing, etc.

Fire Input Type

In the normally open state, closing triggers fire protection. In the normally closed state, disconnection triggers fire protection.

3. Click **More** to adjust **Barrier Open Angle**.
4. Click **Save**.

11.7 System and Maintenance

You can view the system information and the capacity. You can also upgrade the device, restore to factory settings, restore to default settings, and reboot the device.

11.7.1 Set Local Parameters

Set the live view parameters, picture and clip settings.

Click **System and Maintenance → System Configuration → Local** to enter the Local page.

Click **Save** to save the settings after the configuration.

Set Live View Parameters

Configure the stream type, the play performance.

Record File Settings

Select a record file size and select a saving path from your local computer .
You can also click **Open** to open the file folder to view details.

Picture and Clip Settings

Select image format, saving path.
You can also click **Open** to open the file folder to view details.

11.7.2 View Device Information

View the device name, language, model, serial No., version, number of channels, IO input, IO output, alarm input, alarm output, and device capacity, etc.

Click **System and Maintenance → System Configuration → System → System Settings → Basic Information** to enter the configuration page.

You can view the language, model, serial No., version, IO input, IO output, alarm input and alarm output number.

You can change **Device Name** and click **Save**.

Click **Upgrade** to upgrade the firmware version.

You can view the device capacity, including person, face, card and event.

11.7.3 Set Time

Set the device's time zone, synchronization mode, server address, NTP port, and interval.

Click **System and Maintenance → System Configuration → System → System Settings → Time Settings** .

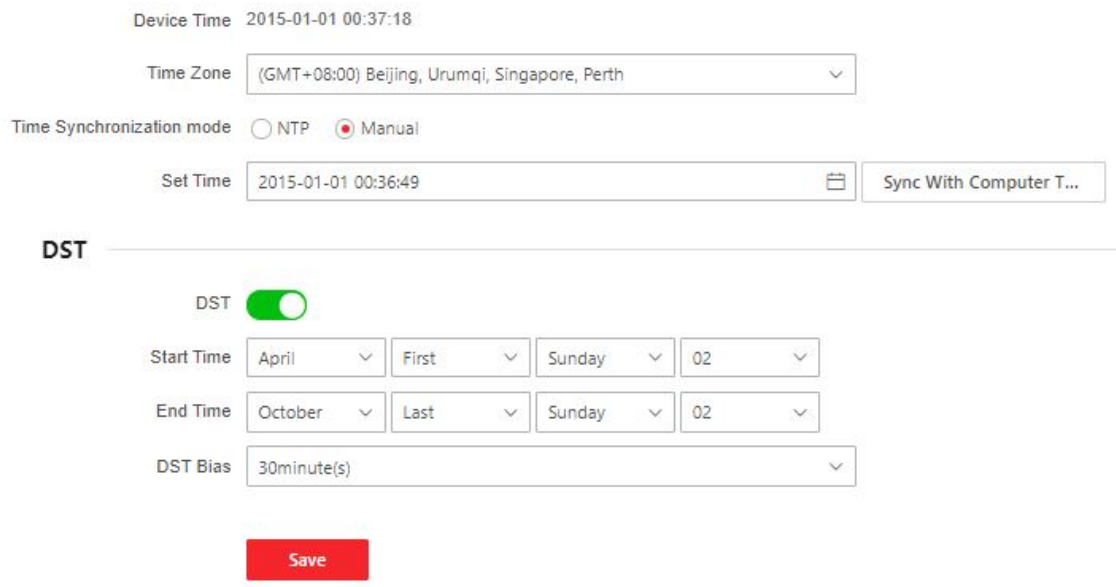

Figure 11-11 Time Settings

Click **Save** to save the settings after the configuration.

Time Zone

Select the device located time zone from the drop-down list.

Time Sync.

NTP

You should set the NTP server's IP address, port No., and interval.

Manual

By default, the device time should be synchronized manually. You can set the device time manually or check **Sync. with Computer Time** to synchronize the device time with the computer's time.

DST

You can set the DST start time, end time and bias time.

11.7.4 Change Administrator's Password

Steps

1. Enter the password change page.
   - Click **System and Maintenance → System Configuration → System → User Management → User Management** and click ✎ .
   - Click **admin → Modify Password** at the upper right corner of the page.
2. Enter the old password and create a new password.
3. Confirm the new password.

4. Click **Save**.

Caution

The password strength of the device can be automatically checked. We highly recommend you change the password of your own choosing (using a minimum of 8 characters, including at least three kinds of following categories: upper case letters, lower case letters, numbers, and special characters) in order to increase the security of your product. And we recommend you change your password regularly, especially in the high security system, changing the password monthly or weekly can better protect your product.
Proper configuration of all passwords and other security settings is the responsibility of the installer and/or end-user.

11.7.5 Online Users

The information of users logging into the device is shown.

Go to **System and Maintenance → System Configuration → System → User Management → Online User** to view the list of online users.

11.7.6 View Device Arming/Disarming Information via PC Web

View device arming type and arming IP address.

Go to **System and Maintenance → System Configuration → System → User Management → Arming/Disarming Information** .

You can view the device arming/disarming information. Click **Refresh** to refresh the page.

11.7.7 Network Settings

Set Basic Network Parameters

Click **System and Maintenance → System Configuration → System → Network → Network Settings → TCP/IP** .

You can view the mac address and MTU.

Set the parameters and click **Save** to save the settings.

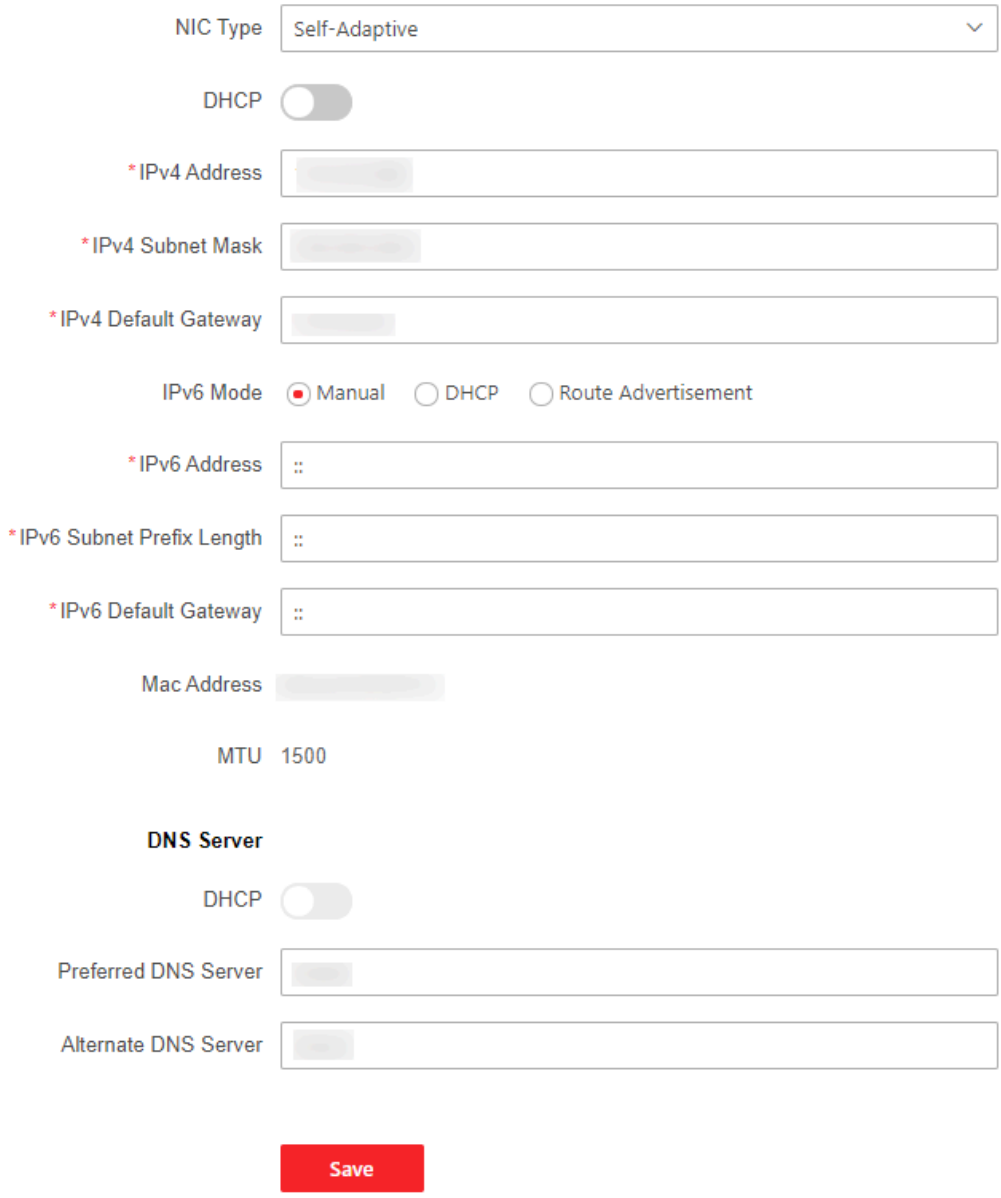

Figure 11-12 Set TCP/IP

NIC Type

Select a NIC type from the drop-down list. By default, it is **Auto**.

DHCP

If uncheck the function, you should set the IPv4 address, IPv4 subnet mask, IPv4 default gateway, Mac address, and MTU.

If you check the function, the system will allocate the IPv4 address, IPv4 subnet mask, the IPv4 default gateway automatically.

IPv6 Mode

Manual

Set the IPv6 address, IPv6 subnet prefix length and IPv6 default gateway manually.

DHCP

The system will allocate the IPv6 address, IPv6 subnet prefix length and IPv6 default gateway automatically.

Route Advertisement

A mechanism for automatic address configuration in the IPv6 protocol stack. The device can complete IPv6 address configuration as long as there are routers in the environment that can provide routing notification messages.

Click **View Route Advertisement** to view the IPv6 address list.

DNS Server

Note

Only when DHCP is enabled can DNS server be set.

Set the preferred DNS server and the alternate DNS server according to your actual need.

Device Hotspot

Set the device hotspot.

Click **System and Maintenance → System Configuration → Network → Network Settings → Device Hotspot** .

Click to **Enable Device Hotspot**. Set hotspot **Name** and **Password**.

Click **Save**. You can use your phone to connect the hotspot and set parameters on the mobile web.

Set Port via PC Web

Click **System and Maintenance → System Configuration → Network → Network Service** .

HTTP

It refers to the port through which the browser accesses the device. For example, when the HTTP Port is modified to 81, you need to enter ***http://192.0.0.65:81*** in the browser for login.

HTTPS

Set the HTTPS for accessing the browser. Certificate is required when accessing.

HTTP Listening

The device can send alarm information to the event alarm IP address or domain name via HTTP protocol/HTTPS protocol. Edit the event alarm IP address or domain name, URL, port, and protocol.

Note

The event alarm IP address or domain name should support the HTTP protocol/HTTPS protocol to receive the alarm information.

Click **System and Maintenance → System Configuration → Network → Network Service → RTSP** .

RTSP

It refers to the port of real-time streaming protocol.

Set OTAP via PC Web

Connect the device to the platform through the OTAP protocol to obtain device information, upload operation status and alarm information, restart and upgrade the device.

Steps

1. Click **System and Maintenance → System Configuration → Network → Device Access → OTAP** .

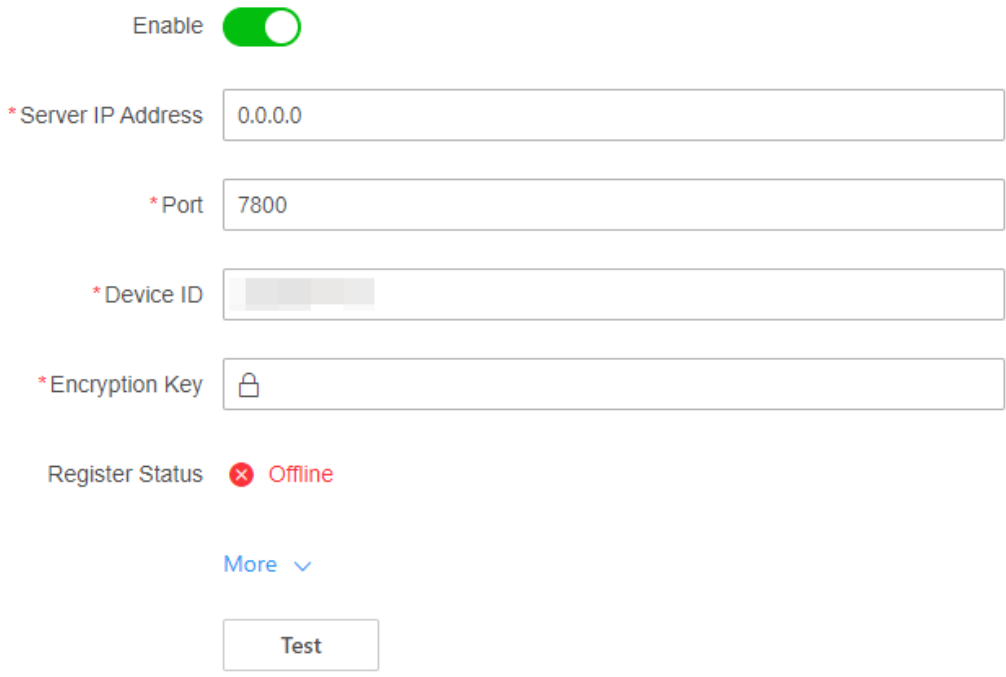

Figure 11-13 Set OTAP

2. Select central group.
3. Click to **Enable** OTAP.
4. Set **Server IP Address**, **Port**, **Device ID** and **Encryption Key**.
5. Click **More** to view the network type and access priority. Drag the operation icon upward or downward to adjust the network priority.

6. Click **Test** to ensure the device can connect to the server and register successfully. Refresh the page or restart the device to see the **Register Status**.
7. Click **Save**.

Platform Access via PC Web

Platform access provides you an option to manage the devices via platform.

Steps

1. Click **System and Maintenance → System Configuration → Network → Device Access → Hik-Connect** to enter the settings page.

   Note

   Hik-Connect is an application for mobile devices. With the App, you can view live image of the device, receive alarm notification and so on.

2. Check **Enable** to enable the function.
3. **Optional:** Check the checkbox of **Custom**, and you can set the server address by yourself.
4. Enter the verification code.
5. **Optional:** Check **Enable** to enable video encryption, set an encryption password and confirm it.
6. Click **More** to view the network type and access priority. Drag the operation icon upward or downward to adjust the network priority.
7. Click **View** to view device QR code. Scan the QR code to bind the account.

   Note

   8 to 32 letters (a to z, A to Z) or numbers (0 to 9), case sensitive. You are recommended to use a combination of no less than 8 letters or numbers.

8. Click **Save** to enable the settings.

11.7.8 Set Video and Audio Parameters via PC Web

Configure Video Parameters via Web Browser

You can set quality, resolution and other parameters of device camera.

Click **System and Maintenance → System Configuration → Video/Audio → Video** to enter the settings page.

Set camera name, stream type, video type, resolution, bit rate type, video quality, frame rate, Max. bitrate, video encoding and I frame interval.

Click **Save**.

Configure Audio Parameters via Web Browser

You can set device volume.

Click **System and Maintenance → System Configuration → Video/Audio → Audio** to enter the settings page.

Slide to enable voice prompt function.

Slide to set **Output Volume**.

Click **Save**.

11.7.9 Set Image Parameters

You can adjust the image parameters, video parameters, supplement parameters and capture interval.

Steps

1. Click **System and Maintenance → System Configuration → Image** .
2. Set the channel as **Entrannce** or **Exit**.
3. Configure the parameters to adjust the image.

   Image Adjustment

   Drag the block or enter the value to adjust the live video's brightness, contrast, saturation, and sharpness.

   LED Light

   Set the supplement light type and mode. You can also set the brightness.

   Backlight

   Enable or disable **WDR**.

   When there are both very bright and very dark areas simultaneously in the view, WDR balances the brightness level of the whole image and provide clear images with details.

   Video Adjustment (Video Standard)

   Set the video frame rate when performing live view remotely. After changing the standard, you should reboot the device to take effect.

   PAL

   25 frames per second. Suitable for mainland China, Hong Kong (China), the Middle East countries, Europe countries, etc.

   NTSC

   30 frames per second. Suitable for the USA, Canada, Japan, Taiwan (China), Korea, the Philippines, etc.

   Start All Recording

   You can click ◉ to record when starting live view.

Capture Interval

You can click to capture image when starting live view.

Full Screen

You can click for full screen view.

4. Click **Restore Default Settings** to restore the parameters to the default settings.

11.7.10 Set Wiegand Parameters via PC Web

You can set the Wiegand transmission direction.

Steps

Note

- Some device models do not support this function. Refer to the actual products when configuration.
- Only the device supporting interface board can set the Wiegand parameters.

1. Click **System and Maintenance → System Configuration → Access Configuration → Wiegand Settings** .

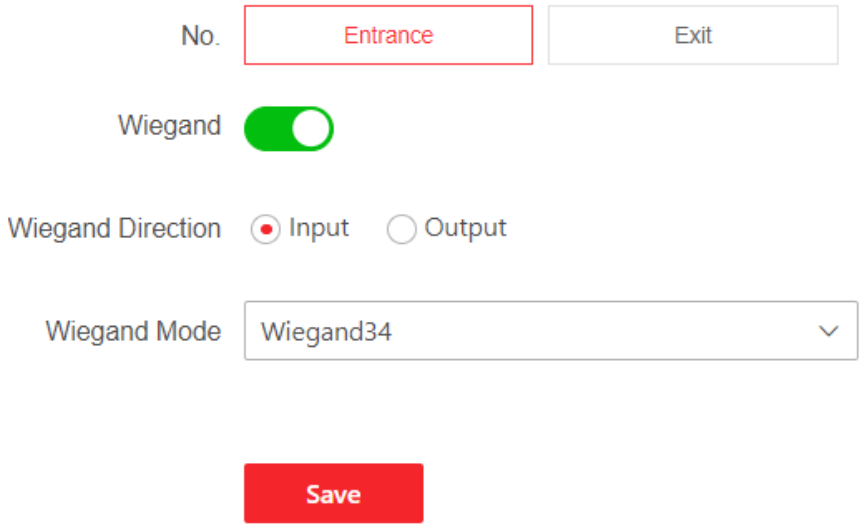

Figure 11-14 Wiegand Page

2. Check **Wiegand** to enable the Wiegand function.
3. Set a transmission direction.

Input

The device can connect a Wiegand card reader.

Output

The can connect an external access controller. And you should set the output type.

4. Click **Save** to save the settings.

Note

If you change the peripheral, and after you save the device parameters, the device will reboot automatically.

11.7.11 Serial Port Settings

Set serial port parameters.

Steps

1. Click **Configuration → Access Control → Serial Port Configuration** .
2. Select a serial port No., and the corresponding serial port type will display automatically.
3. Set the serial port parameters.

   Baud Rate

   Configure data transfer rate.

   Data Bit

   Configure the number of bits to send data.

   Stop Bit

   Select the end point for one frame of data.

   Parity

   Select the serial communication error detection principle. You can choose to detect that the number of 1 of the data bits and check digits is odd or even, or that there is no check digit.
4. Set the **Peripheral Type** as **Card Reader**, **Card Receiver**, **QR Code Scanner** or **Disable**.
5. Set the **Peripheral Position** as **Entrance** or **Exit**.
6. You can view the external device model.
7. Click **Save**.

11.7.12 Customize Audio Content

Customize the output audio content when authentication succeeded and failed.

Steps

1. Click **Configuration → Preference → Prompt Schedule** .

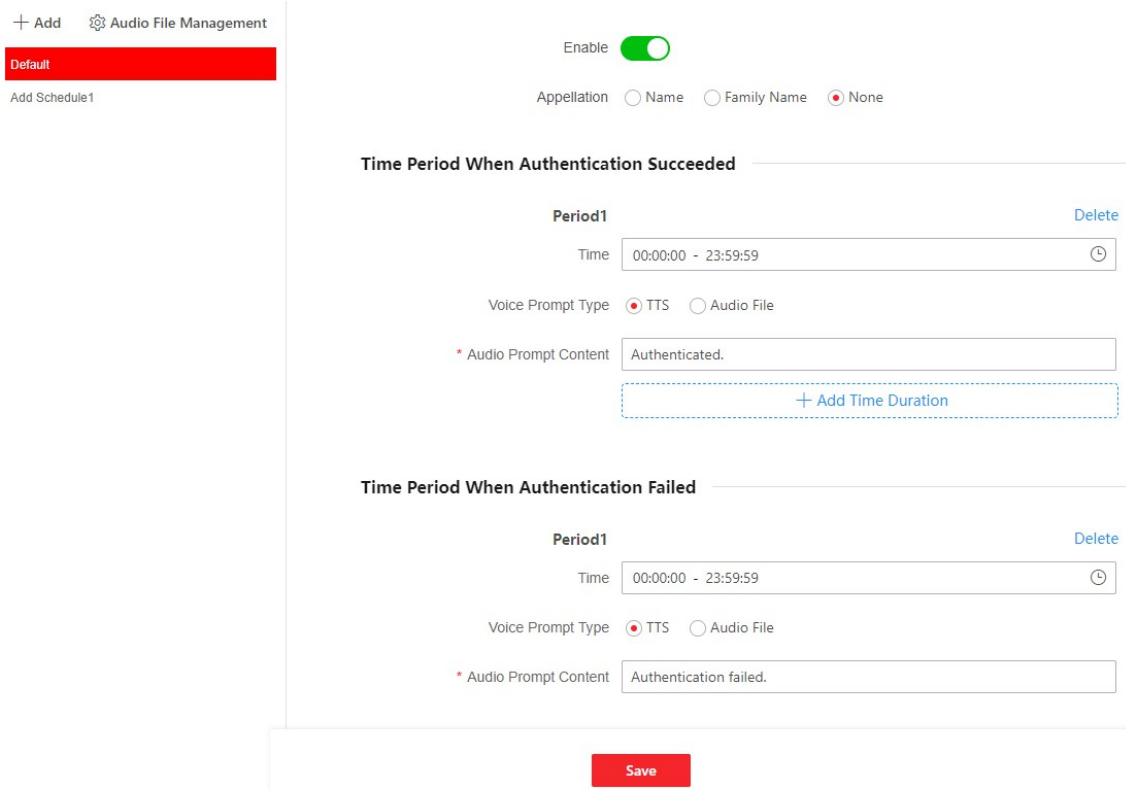

Figure 11-15 Customize Audio Content

2. Click **+ Add** to add a new schedule. Or select added time schedule.
3. Enable the function.
4. Set the appellation.
5. Set the time period when authentication succeeded.
   1) Click **Add Time Duration**.
   2) Set the time duration.

   Note

   If authentication is succeeded in the configured time duration, the device will broadcast the configured content.

   3) Set the audio content.

   TTS

   If you choose TTS, you need to set the language and enter the prompt content of authentication success.

   Audio File

   If you choose audio file, you need to select an available audio file from the drop-down list or click **Audio File Management** to add a new file.

Note

The audio file's format should be wav, and the size should be within 200 KB.

4) **Optional:** Repeat substep 1 to 3.
5) **Optional:** Click **Delete** to delete the configured time duration.

6. Set the time duration when authentication failed.

1) Click **Add Time Duration**.
2) Set the time duration.

Note

If authentication is failed in the configured time duration, the device will broadcast the configured content.

3) Set the audio content.

TTS

If you choose TTS, you need to set the language and enter the prompt content of authentication failure.

Audio File

If you choose audio file, you need to select an available audio file from the drop-down list or click **Audio File Management** to add a new file.

Note

The audio file's format should be wav, and the size should be within 200 KB.

4) **Optional:** Repeat substep 1 to 3.
5) **Optional:** Click **Delete** to delete the configured time duration.

7. Click **Save** to save the settings.

11.7.13 Maintenance

Reboot

You can reboot the device.

Click **System and Maintenance → Maintenance → Restart** to enter the settings page.

Click **Restart** to reboot the device.

Upgrade

Upgrade Locally via PC Web

You can upgrade the device locally.

Click **System and Maintenance → Maintenance → Upgrade** to enter the settings page.

Select an upgrade type from the drop-down list. Click and select the upgrade file from your local PC. Click **Upgrade** to start upgrading.

Online Upgrading via PC Web

You can upgrade the device online.

Click **System and Maintenance → Maintenance → Upgarde** to enter the settings page.

Click**Check for Updates**to check whether there is updated versions.

If the device is connected to the network and added to Hik-Connect App, you can tap **Device Upgrade → Online Upgrade** on device for upgrading when there is an updated version in Hik-Connect App.

Restoration

Restore to Factory Settings via Web Browser

You can restore device to factory settings.

Click **System and Maintenance → Maintenance → Backup and Reset** to enter the settings page.

Click **Restore All**, all parameters will be restored to the factory settings. You should activate the device before usage.

Restore to Default Settings via PC Web

You can restore device to default settings.

Click **System and Maintenance → Maintenance → Backup and Reset** to enter the settings page.

Click **Restore**, the device will restore to the default settings, except for the device IP address and the user information.

Export Device Parameters via PC Web

Export device parameters.

Go to **System and Maintenance → Maintenance → Backup and Reset** .

Backup

Click **Export** to export device parameters.

Note

Export device parameters and import those parameters to other devices.

Import Device Parameters via PC Web

Import the configuration parameters.

Go to **System and Maintenance → Maintenance → Backup and Reset** .

Import Config File

Click and select a file from local PC. Click **Import**.

Device Debugging

You can set device debugging parameters.

Steps

1. Click **System and Maintenance → Maintenance → Device Debugging** .
2. You can set the following parameters.

Lane Studying/Motor Self-Test

Enable SSH

To raise network security, disable SSH service. The configuration is only used to debug the device for the professionals.

Motor Study & Self-Test

Lane Studying

Click **Start**, the device will enter the studying mode. It will study the closed position of the barrier.

Motor Self-Test

Click **Start**, the motor will test the operation status automatically.

Encoder Self-Test

Select a channel (lane), and click **Start**, the encoder of the selected lane will test the operation status automatically.

IR Self-Test

After enabling IR self-test function, the device will sound to exit the channel (lane) before opening/closing. The barrier is forced to open in entrace/exit at the highest speed, at this time IR anti-pinch is defunct. If IR is triggered or blocked, the device will sound detection failure.

Select a channel (lane) and tap **IR Self-Test**, the device will test all IR detectors.

Note

Make sure there are no person in the lane.

Print Log

You can click **Export** to export log.

Capture Network Packet

You can set the **Capture Packet Duration**, **Capture Packet Size**, and click **Start** to capture.

Debug Command Management

Select the command type **Quick Command** or enter the content of **Custom Command**.

Select the board type from the drop-down list, click **Send** to send the debug command, you can view the received command information of the device in **Execution Result**.

Click **End Debugging**, the device restores to normal operation status.

Note

- To ensure the device performance, please click **End Debugging** to close the Debugging command
- If you do not tap **End Debugging**, the device will end the debugging mode within 7×24 hours automatically.

IR Exception Info.

Click **Export** to export the exceptional IR detectors reports.

Test Protocol via PC Web

Select a protocol address, and enter the protocol to test. You can debug the device according to the response header and returned value.

Go to **System and Maintenance → Maintenance → Device Debugging → Protocol Testing** .

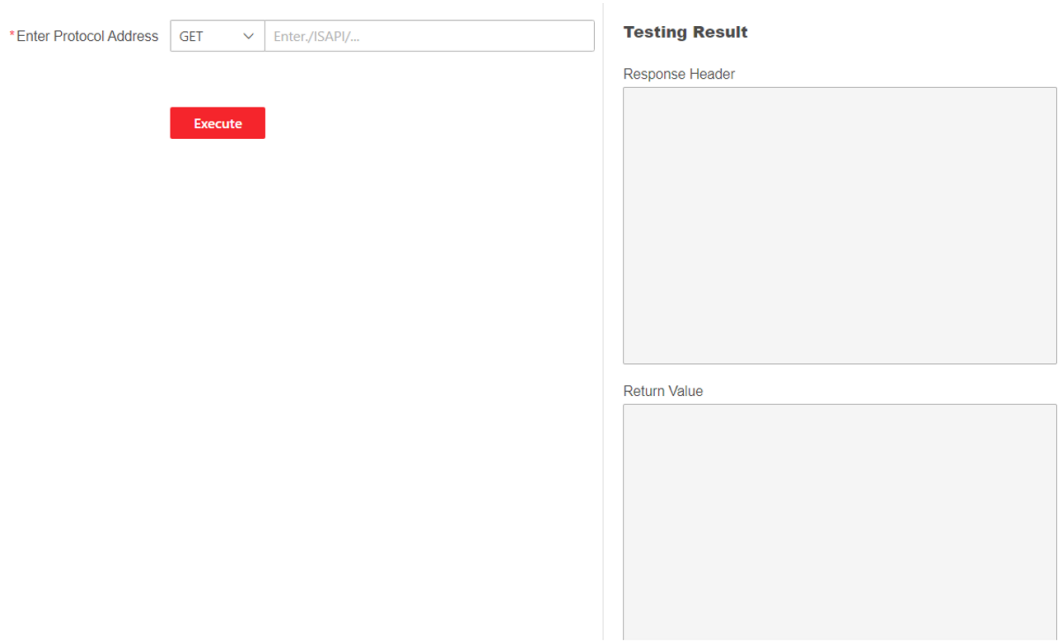

Figure 11-16 Protocol Testing

Select a protocol address, and enter the protocol. Click **Execute**.

Debug the device according to the response header and returned value.

Set Network Penetration Service via PC Web

When the devcie is deployed in the LAN, you can enable the penetration service to realize device remote management.

Steps

1. Go to **System and Maintenance → Maintenance → Device Debugging → Network Penetration Service**.
2. Slide **Enable Penetration Service**.
3. Set **Server IP Address** and **Server Port**. Create **User Name** and **Password**.
4. **Optional:** You can set **Heartbeat Timeout**. The value range is 1 to 6000.
5. **Optional:** You can view the status of the penetration service. Click **Refresh** to refresh the status.
6. Click **Save**.

Note

The penetration service will auto disabled after 48 h.

Component Status

Main Lane Status

Device Component

You can view the status of boards, IR adaptors and camera.

Peripheral

You can view the status of the card reader and tamper input.

Temperature

You can view the pedestal temperature.

Movement

You can view the working status of motor encoder.

Sub Lane Status

Device Component

You can view the status of boards, IR adaptors and camera.

Peripheral

You can view the status of the card reader and tamper input.

Temperature

You can view the pedestal temperature.

Movement

You can view the working status of motor encoder.

Others

Passing Mode

You can view the entrance and exit mode.

IR Detector Status

You can view the status of each pair of the IR beam sensors.

Input and Output Status

You can view the status of the event input, alarm output and fire protection alarm.

Other Status

You can view the status of the barrier and the keyfob receiving module.

View Log via PC Web

You can search and view the device logs.

Go to **System and Maintenance → Maintenance → Log** .

Set the major and minor type of the log type. Set the start time and end time for searching, and click **Search**.

The results will be displayed below, which including the No., time, the major type the minor type, the channel No., the local/remote user information, the remote host IP, etc.

Advanced Settings via PC Web

You can configure face parameters and view version information.

Go to **System and Maintenance → Maintenance → Advanced Settings** .

Enter the device activation password and click **Enter**.

Face Parameter

Enable **Custom Anti-Spoofing Detection** and you can set the **Anti-Spoofing Detection Threshold 1:1**, **Anti-Spoofing Detection Threshold 1:N**.
Enable **Lock Face for Authentication**, and set **Lock Duration**. The face will be locked for the set lock duration after the failed attempt limit of anti-spoofing detection has been reached.
Click **Save**.

Version Information

You can view the different version information here.

11.7.14 Certificate Management

It helps to manage the server/client certificates and CA certificate.

Note

The function is only supported by certain device models.

Create and Import HTTPS Certificate

Steps

1. Go to **System and Maintenance → Safe → Certificate Management** .
2. In the **HTTPS Certificate** area, click **Create Certificate Request**.
3. Input certificate information and click **Save**.
   - Click **View** and the created certificate will be displayed.
   - The certificate will be saved automatically.
4. Download the certificate and save it to an asking file in the local computer.
5. Send the asking file to a certification authority for signature.
6. Import the signed certificate.
   1) In the **Import Key** area, select a certificate from the local, and click **Import**.

2) In the **Import Communication Certificate** area, select a certificate from the local, and click **Import**.

Create and Import SYSLOG Certificate

Steps

1. Go to **System and Maintenance → Safe → Certificate Management** .
2. In the **SYSLOG Certificate** area, click **Create Certificate Request**.
3. Input certificate information and click **Save**.
   - Click **View** and the created certificate will be displayed.
   - The certificate will be saved automatically.
4. Download the certificate and save it to an asking file in the local computer.
5. Send the asking file to a certification authority for signature.
6. Import the signed certificate.
   1) In the **Import Key** area, select a certificate from the local, and click **Import**.
   2) In the **Import Communication Certificate** area, select a certificate from the local, and click **Import**.

Import CA Certificate

Before You Start

Prepare a CA certificate in advance.

Steps

1. Go to **System and Maintenance → Safe → Certificate Management** .
2. Create an ID in the **CA Certificate ID** area.

   Note

   The input certificate ID cannot be the same as the existing ones.
3. Upload a certificate file from the local.
4. Click **Import**.

Chapter 12 Other Platforms to Configure

You can also configure the device via iVMS-4200 Client Software or HikCentral Access Control. For details, see the platforms' user manual.

iVMS-4200 Client Software

Click/tap the link to view the client software's user manual.

http://enpinfodata.hikvision.com/analysisQR/showQR/ca930247

HikCentral Access Control (HCAC)

Click/tap the link to view the HCAC's user manual.

http://enpinfodata.hikvision.com/analysisQR/showQR/f2f6cf42

Appendix A. Event and Alarm Type

Event	Alarm Type
Tailgating	Visual and Audible
Reverse Passing	Visual and Audible
Force Accessing	None
Climb over Barrier	Visual and Audible
Overstay	Visual and Audible
Passing Timeout	None
Intrusion	Visual and Audible
Free Passing Authentication Failed	Visual
Barrier Obstructed	None

Appendix B. Legal Information

About this Document

- This Document includes instructions for using and managing the Product. Pictures, charts, images and all other information hereinafter are for description and explanation only.
- The information contained in the Document is subject to change, without notice, due to firmware updates or other reasons. Please find the latest version of the Document at the Hikvision website (***https://www.hikvision.com***). Unless otherwise agreed, Hangzhou Hikvision Digital Technology Co., Ltd. or its affiliates (hereinafter referred to as "Hikvision") makes no warranties, express or implied.
- Please use the Document with the guidance and assistance of professionals trained in supporting the Product.

About this Product

- This product can only enjoy the after-sales service support in the country or region where the purchase is made.
- If the product you choose is a video product, please scan the following QR code to obtain the "Initiatives on the Use of Video Products", and read it carefully.

Acknowledgment of Intellectual Property Rights

- Hikvision owns the copyrights and/or patents related to the technology embodied in the Products described in this Document, which may include licenses obtained from third parties.
- Any part of the Document, including text, pictures, graphics, etc., belongs to Hikvision. No part of this Document may be excerpted, copied, translated, or modified in whole or in part by any means without written permission.
- HIKVISION and other Hikvision's trademarks and logos are the properties of Hikvision in various jurisdictions.
- Other trademarks and logos mentioned are the properties of their respective owners.

LEGAL DISCLAIMER

- TO THE MAXIMUM EXTENT PERMITTED BY APPLICABLE LAW, THIS DOCUMENT AND THE PRODUCT DESCRIBED, WITH ITS HARDWARE, SOFTWARE AND FIRMWARE, ARE PROVIDED "AS IS" AND "WITH ALL FAULTS AND ERRORS". HIKVISION MAKES NO WARRANTIES, EXPRESS OR

IMPLIED, INCLUDING WITHOUT LIMITATION, MERCHANTABILITY, SATISFACTORY QUALITY, OR FITNESS FOR A PARTICULAR PURPOSE. THE USE OF THE PRODUCT BY YOU IS AT YOUR OWN RISK. IN NO EVENT WILL HIKVISION BE LIABLE TO YOU FOR ANY SPECIAL, CONSEQUENTIAL, INCIDENTAL, OR INDIRECT DAMAGES, INCLUDING, AMONG OTHERS, DAMAGES FOR LOSS OF BUSINESS PROFITS, BUSINESS INTERRUPTION, OR LOSS OF DATA, CORRUPTION OF SYSTEMS, OR LOSS OF DOCUMENTATION, WHETHER BASED ON BREACH OF CONTRACT, TORT (INCLUDING NEGLIGENCE), PRODUCT LIABILITY, OR OTHERWISE, IN CONNECTION WITH THE USE OF THE PRODUCT, EVEN IF HIKVISION HAS BEEN ADVISED OF THE POSSIBILITY OF SUCH DAMAGES OR LOSS.

- YOU ACKNOWLEDGE THAT THE NATURE OF THE INTERNET PROVIDES FOR INHERENT SECURITY RISKS, AND HIKVISION SHALL NOT TAKE ANY RESPONSIBILITIES FOR ABNORMAL OPERATION, PRIVACY LEAKAGE OR OTHER DAMAGES RESULTING FROM CYBER-ATTACK, HACKER ATTACK, VIRUS INFECTION, OR OTHER INTERNET SECURITY RISKS; HOWEVER, HIKVISION WILL PROVIDE TIMELY TECHNICAL SUPPORT IF REQUIRED.
- YOU AGREE TO USE THIS PRODUCT IN COMPLIANCE WITH ALL APPLICABLE LAWS, AND YOU ARE SOLELY RESPONSIBLE FOR ENSURING THAT YOUR USE CONFORMS TO THE APPLICABLE LAW. ESPECIALLY, YOU ARE RESPONSIBLE, FOR USING THIS PRODUCT IN A MANNER THAT DOES NOT INFRINGE ON THE RIGHTS OF THIRD PARTIES, INCLUDING WITHOUT LIMITATION, RIGHTS OF PUBLICITY, INTELLECTUAL PROPERTY RIGHTS, OR DATA PROTECTION AND OTHER PRIVACY RIGHTS. YOU SHALL NOT USE THIS PRODUCT FOR ANY PROHIBITED END-USES, INCLUDING THE DEVELOPMENT OR PRODUCTION OF WEAPONS OF MASS DESTRUCTION, THE DEVELOPMENT OR PRODUCTION OF CHEMICAL OR BIOLOGICAL WEAPONS, ANY ACTIVITIES IN THE CONTEXT RELATED TO ANY NUCLEAR EXPLOSIVE OR UNSAFE NUCLEAR FUEL-CYCLE, OR IN SUPPORT OF HUMAN RIGHTS ABUSES.
- IN THE EVENT OF ANY CONFLICTS BETWEEN THIS DOCUMENT AND THE APPLICABLE LAW, THE LATTER PREVAILS.

Data Protection

- To protect data, the development of Hikvision Products incorporates privacy by design principles. For example, for Products with facial recognition features, biometrics data is stored in your Products with encryption method; for fingerprint Products, only fingerprint template will be saved, which is impossible to reconstruct a fingerprint image.
- As a data controller/processor, you may process personal data, including collection, storage, use, processing, disclosure, deletion, etc. You are advised to pay attention to and comply with applicable laws and regulations related to the protection of personal data, including without limitation, conducting security controls to safeguard personal data, such as, implementing reasonable administrative and physical security controls, conduct periodic reviews and the assessments of the effectiveness of your security controls.

© Hangzhou Hikvision Digital Technology Co., Ltd. All rights reserved.

See Far, Go Further